SLV-325/CP/EI/UB/VP
RMT-V117/V118A

SERVICE MANUAL

AEP Model
SLV-325

UK Model
SLV-325UB

Germany Model
SLV-325VP

Spanish Model
SLV-325CP

Irish Model
SLV-325EI

- Refer to the SERVICE MANUAL of VHS MECHANICAL ADJUSTMENT II for MECHANICAL ADJUSTMENTS. (9-972-816-11)

VHS Hi-Fi

SPECIFICATIONS

System

Channel coverage

SLV-325/325VP
- VHF channels E2 - E12
  (A to H only for Italy)
- CATV channels S01 - S03
- CATV channels S1 - S20
- HYPER S21 - S41
- UHF channels E21 - E69

SLV-325UB
- UHF channels B21 - B68

SLV-325EI
- VHF channels A - J
- CATV channels S01 - S03
- CATV channels S1 - S20
- HYPER S21 - S41
- UHF channels E21 - E69

SLV-325CP
- VHF channels E2 - E12
- CATV channels S01 - S03
- CATV channels S1 - S20
- HYPER S21 - S41
- UHF channels E21 - E69

Inputs and outputs

Video inputs	EURO-AV: 21-pin (pin 20)
Video outputs	EURO-AV: 21-pin (pin 19)
Audio inputs	EURO-AV: 21-pin (pins 2 and 6)
Audio outputs	EURO-AV: 21-pin (pins 1 and 3)

General

Power requirements	240 V AC, 50 Hz (SLV-325UB) 220 V - 230 V AC, 50 Hz (SLV-325/325VP/325EI/325CP)
Power consumption	25 W
Operating temperature	5°C to 40°C (41°F to 104°F)
Storage temperature	–20°C to 60°C (–4°F to 140°F)
Dimensions	430 × 86 × 356 mm (w/h/d) (17 × 3 1/2 × 14 1/8 inches) (including projection parts and controls)
Weight	5.7 kg (12 lb 9 oz)

Accessories supplied

Wireless Remote Commander RMT-V117 or
(RMT-V118A for the SLV-325CP) with two R6 batteries (1)
75-ohm coaxial cable (1)
Plastic adjuster
AC power cord (1)

Design and specifications are subject to change without notice.

Note

This appliance conforms with EEC Directive 87/308/EEC regarding interference suppression.

Remote commander is available as a unit. But as individual parts the battery case lid of commander is only avaiable.

MICROFILM

VIDEO CASSETTE RECORDER

SONY®

SAFETY CHECK-OUT

After correcting the original service problem, perform the following safety checks before releasing the set to the customer:

1. Check the area of your repair for unsoldered or poorly-soldered connections. Check the entire board surface for solder splashes and bridges.
2. Check the interboard wiring to ensure that no wires are "pinched" or contact high-wattage resistors.
3. Look for unauthorized replacement parts, particularly transistors, that were installed during a previous repair. Point them out to the customer and recommend their replacement.
4. Look for parts which, though functioning, show obvious signs of deterioration. Point them out to the customer and recommend their replacement.
5. Check the B+ voltage to see it is at the values specified.

SAFETY-RELATED COMPONENT WARNING!!

COMPONENTS IDENTIFIED BY MARK ⚠ OR DOTTED LINE WITH MARK ⚠ ON THE SCHEMATIC DIAGRAMS AND IN THE PARTS LIST ARE CRITICAL TO SAFE OPERATION. REPLACE THESE COMPONENTS WITH SONY PARTS WHOSE PART NUMBERS APPEAR AS SHOWN IN THIS MANUAL OR IN SUPPLEMENTS PUBLISHED BY SONY.

ATTENTION AU COMPOSANT AYANT RAPPORT À LA SÉCURITÉ!

LES COMPOSANTS IDENTIFIÉS PAR UNE MARQUE ⚠ SUR LES DIAGRAMMES SCHÉMATIQUES ET LA LISTE DES PIÈCES SONT CRITIQUES POUR LA SÉCURITÉ DE FONCTIONNEMENT. NE REMPLACER CES COMPOSANTS QUE PAR DES PIÈCES SONY DONT LES NUMÉROS SONT DONNÉS DANS CE MANUEL OU DANS LES SUPPLÉMENTS PUBLIÉS PAR SONY.

TABLE OF CONTENTS

Section	Title	Page
1.	GENERAL	
	Basic Operations	5
	Playing a Video Tape	5
	Recording While Watching the TV Programme	5
	Recording While Watching Another Programme	6
	Recording TV Programmes Using the Timer	6
	Using the Quick Timer for Recording	7
	Saving a Recording	7
	Using the VCR Before Timer Recording Begins	8
	Checking or Changing Timer Settings	8
	Advanced Operations	9
	Replaying, Searching, and Variable Speed Play	9
	Using the Time and Tape Counters	9
	Reading the Front Panel Display	10
	Understanding the On-Screen Menus	10
	Setting the VCR to Do Multiple Functions	11
	Fine-Tuning the Picture	12
	Removing Picture Distortion	12
	Editing Video Tapes With Another VCR	13
	For Your Information	13
	Identifying the Parts and Controls	13
2.	DISASSEMBLY	
2-1.	Front Panel Assembly and Removal of Cabinet	15
2-2.	Removal of Control Switch Block and MF-151/MF-152 Board	15
2-3.	Removal of PC-54, YP-11, CV-26 and CP-52 Boards	16
2-4.	Removal of FL Block Assembly	16
2-5.	Removal of MD Block	17
2-6.	Removal of Power Block Assembly	17
2-7.	Removal of MA-125 Board	18
2-8.	Internal Views	19
3.	DIAGRAMS	
3-1.	Circuit Boards Location	20
3-2.	Overall Block Diagram	21
3-3.	Video Block Diagram	23
3-4.	Servo Block Diagram	27
3-5.	System Control Block Diagram	30
3-6.	System Control Microcomputer (CXP80624:IC501 on MA-125 Board) Port Function Description	32
3-7.	Timer/Mode Control Microcomputer (CXP50116:IC001 on MF-151 Board) Port Function Description	34
3-8.	System Control–Video Block Interface	37
3-9.	System Control–Servo Peripheral Circuit Interface	39
3-10.	System Control–Mechanism Block Interface	41
3-11.	System Control–System Control Peripheral Circuit Interface	43
3-12.	System Control–Audio Block Interface	43
3-13.	Timer, Mode Control Block Diagram	45
3-14.	Audio Block Diagram	47
3-15.	Tuner Block Diagram	49
3-16.	Power Block Diagram	52
4.	PRINTED WIRING BOARDS AND SCHEMATIC DIAGRAMS	
4-1.	Frame Schematic Diagram	55
4-2.	Printed Wiring Boards and Schematic Diagrams	58
	RP-100 Board	58
	YP-11 Board	63
	PC-54 Board	68
	MA-125 (Servo, System Control, Tuner) Board	73
	MA-125 (AUDIO) Board	80
	CP-52, CP-53 Board	85
	CV-26 Board	90
	MD-40 Board	95
	MF-151, MF-152 Boards	100
	Switch Block	105
	Power Block	107
4-3.	Semiconductors	110
5.	EXPLODED VIEWS	
5-1.	Front Panel, Case Block Assemblies	111
5-2.	Power Supply Block Assembly	112
5-3.	Main Board Block Assembly	113
5-4.	FL Block Assembly	114
5-5.	MD Chassis Assembly 1	115
5-6.	MD Chassis Assembly 2	116
5-7.	MD Chassis Assembly 3	117
6.	ELECTRICAL PARTS LIST	
	Electrical Parts List	118
	Hardware List	136
7.	ELECTRICAL ADJUSTMENTS	
7-1.	Pre-adjustment Preparations	137
7-1-1.	Instruments to be Used	137
7-1-2.	Connection	137
7-1-3.	Setup for Adjustment	137
7-1-4.	Alignment Tape (MH-2)	137
7-1-5.	Specified I/O Level and Impedance Input/output terminal	138
7-1-6.	Adjusting Sequence	138
7-2.	Power Supply Adjustment	138
7-2-1.	UNSW 12V Adjustment (Power Block)	138
7-2-2.	Power Supply Check (Power Block)	139
7-3.	Servo System Adjustment	139
7-3-1.	Switching Position Adjustment (MA-125 Board)	139
7-4.	Video System Adjustments	140
7-4-1.	Playback Y Signal Level Adjustment (YP-11 Board)	140
7-4-2.	Y Signal NR Level Adjustment (YP-11 Board)	140
7-4-3.	Sync AGC Adjustment (YP-11 Board)	140
7-4-4.	Sync Tip Carrier Set and Deviation Adjustment (YP-11 Board)	141

Section	Title	Page
7-4-5.	White Clip and Dark Clip Adjustments (YP-11 Board)	141
7-4-6.	Recording Y Signal Level Adjustment (YP-11 Board/RP-100 Board)	141
7-4-7.	Recording Chroma Level Adjustment (PC-54 Board)	142
7-4-8.	Character Generator AFC Adjustment (CV-26 Board)	142
7-4-9.	Character Position Adjustment (CV-26 Board)	142
7-5.	AUDIO SYSTEM ADJUSTMENT	143
1.	ACE head adjustment	143
2.	E-E output level check	143
3.	Recording bias adjustment (MA-125 board)	143
4.	Overall level characteristic and distortion factor check	143
5.	Overall S/N check	144
7-6.	Tuner System Adjustments	144
7-6-1.	RF AGC Adjustment (IF701 Unit/MA-125 Board)	144
7-7.	Arrangement Diagrams for Adjustment Parts	146

Basic Operations

This section is extracted from instruction manual.

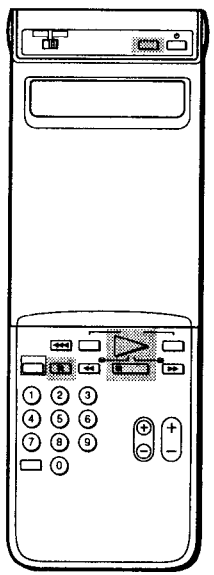

Playing a Video Tape

When you want to play a video tape, just slide the tape into the tape compartment until the VCR grips the tape. The power will go on automatically and the VCR will start playing the tape immediately.

1 Turn on the TV.

2 **SLV-325VP models only:** Open the drop-down panel and set the COLOUR SYSTEM switch on the VCR to one of the settings below depending on the type of video tape you want to play:

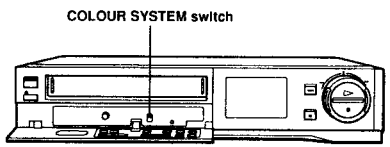

To Play	Set to
PAL video tapes	**PAL**
MESECAM video tapes	**MESECAM**

3 Insert the video tape.
The VCR goes on automatically.

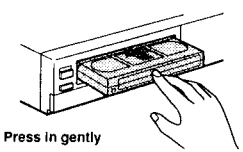

4 Press the TV/VTR button (on the remote control) several times until "VTR" appears in the front panel display. (If your VCR has an aerial connection instead of a EURO-AV connection, turn to the video channel you set the VCR to in "Tuning the VCR to Your TV" in **Getting Started**.)

5 Press ► PLAY.
When the tape reaches the end, it automatically rewinds.

To	Press
Stop the tape	■ **STOP**
Interrupt play	II **PAUSE** (Press PAUSE again to resume play.)
Eject the tape	**EJECT** button on the VCR deck.

If the time/tape counter display appears on the TV screen, press DATA SCREEN on the remote control to remove it. The information on the time/tape counter tells you how much tape is left on the spool and the amount of time the tape has been playing.

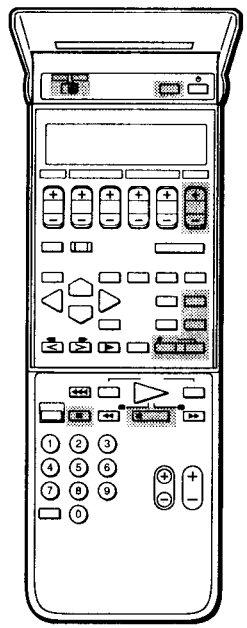

You can record TV programmes in one of three ways:
- While you are watching the programme
- While you are watching another programme
- While you are not watching the TV at all (Timer Recording)

Recording While Watching the TV Programme

While recording a TV programme, you may want to record the whole programme or you may want to delete certain scenes.

1 Insert a video tape. (Its safety tab must be in place.)

2 Press the TV/VTR button (on the remote control) several times until "VTR" appears in the front panel display. (If your VCR has an aerial connection instead of a EURO-AV connection, turn to the video channel you set the VCR to in "Tuning the VCR to Your TV" in **Getting Started**.)

3 Press INPUT SELECT several times so that "TUNER" (TV) is displayed in the VCR front panel.

4 To operate the TV using the remote control, slide the TV-VTR selector (at the top of the remote control) to TV.

5 Press the plus (+) or minus (–) side of the PROG +/– button to select the channel you want to record and adjust the volume with VOL +/–.

6 Press ● REC while pressing the button to the right of it.
Recording starts. The tape will automatically rewind when it reaches the end.

To	Press
Turn off the data screen	**DATA SCREEN** (If left on-screen, the data will not record on the tape.)
Delete a scene you don't want recorded	**PAUSE** while the unwanted scene is being broadcast. Press PAUSE again to resume recording.
Stop recording	**STOP**
Have the VCR stop after recording	**QUICK TIMER** (on the VCR deck) while recording; press until the amount of time you want to record is displayed.

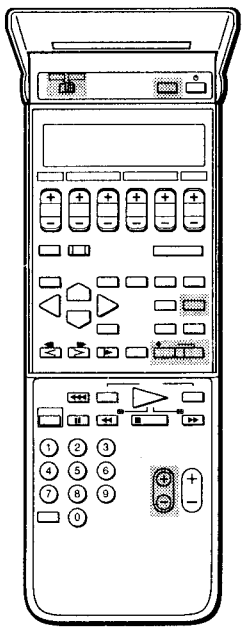

Recording While Watching Another Programme

The recording procedure differs depending on the type of TV-VCR connection you have made.

1 Turn on the TV.

2 Insert a video tape. (Its safety tab must be in place.)

3 Press the TV/VTR button (on the remote control) several times until "VTR" appears in the front panel display. (If your VCR has an aerial connection instead of a EURO-AV connection, turn to the video channel you set the VCR to in "Tuning the VCR to Your TV" in **Getting Started**.)

4 Press INPUT SELECT several times so that "TUNER" is displayed in the VCR front panel.

5 To operate the TV using the remote control, slide the TV-VTR selector on the remote control to TV.

6 Do one of the following depending on the type of connection your VCR has:

If the VCR has a EURO-AV connection:

1 Press the plus (+) or minus (–) side of the PROG +/– button to select the channel you want to record.

2 Press ● REC while pressing the button to the right of it.
Recording starts.

3 Press the TV/VTR button until "VTR" disappears from the front panel display on the VCR.

4 Press PROG +/– to select the TV channel you want to watch and adjust the volume with VOL +/–.

If the VCR has an aerial connection only:

1 Press the plus (+) or minus (–) side of the PROG +/– button to select the channel you want to record.

2 Press ● REC while pressing the button to the right of it.
Recording starts.

3 Press PROG +/– to select the TV channel you want to watch and adjust the volume with VOL +/–.

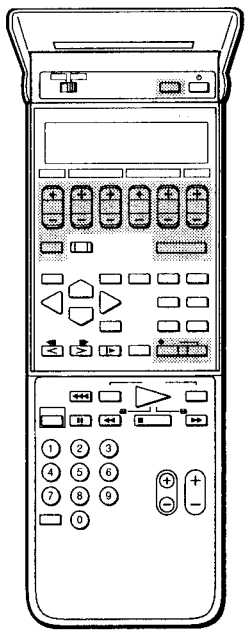

If several short beeps sound when you press TRANSMIT the timer settings have not registered in the VCR. Press TRANSMIT again; otherwise, make sure that:
- a cassette with its safety tab is inserted
- the end of the tape has not been reached
- the VCR is not in play mode
- eight timer settings have not already been made

To stop timer recording, press TIMER REC ON/OFF.

Recording TV Programmes Using the Timer

You can use the timer on the VCR to automatically record TV programmes while you are out. For example, you might want to record a broadcast that is on Monday to Friday from 18:00 to 19:00, and another programme that is shown every Sunday at 8:00. You can set the VCR to record up to eight TV programmes within a month.

1 Before turning on the VCR, check that the clocks on the remote control and front panel show the correct time (if not, see "Setting the Clock" in ***Getting Started***).

2 Press the TV/VTR button (on the remote control) several times until "VTR" appears in the front panel display. (If your VCR has an aerial connection instead of a EURO-AV connection, turn to the video channel you set the VCR to in "Tuning the VCR to Your TV" in **Getting Started**.)

3 Make sure the safety tab on the video tape is in place and insert the tape.

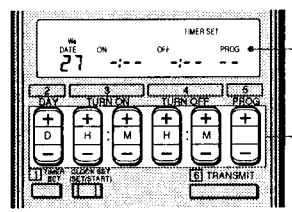

LCD Read-Out Display

Timer Setting Buttons
Use the remote control to set the timer. You don't have to be near the VCR to set the timer. Once you've made your settings on the remote control, aim at the VCR and press TRANSMIT to register the settings with the VCR deck.

4 Press TIMER SET.
"TIMER SET" appears in the LCD read-out display at the top of the remote control.

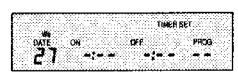

5 Choose one of the following options:

To Record on a Single Date
1 Press **D** (day) until the day you want to start recording appears in the LCD read-out.
2 Continue at **step 6** below.

To Record on Multiple Dates
1 Press **D** (day) until today's date appears in the LCD read-out.
2 Press the – (minus) side of the **D** button to select one of the following:

Sunday-Saturday		Every Wednesday
Monday-Saturday		Every Thursday
Monday-Friday	*or*	Every Friday
Every Monday		Every Saturday
Every Tuesday		Every Sunday

6 Press **H** (hour) and **M** (minute) in the TURN ON section to set when recording is to start, and **H** and **M** in the TURN OFF section to set when recording is to end.

7 Press PROG +/– to select the TV channel to be recorded.
"TRANSMIT" flashes in the LCD read-out.

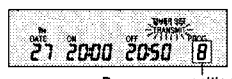

Programme position

8 Point the remote control at the remote sensor on the VCR and press TRANSMIT.
With a long beep, the VCR activates recording standby and displays the Program List on the TV screen for a few seconds.

9 Press TIMER SET.
The current time appears in the front panel display, and the VCR stands by to go on automatically at the first timer setting.

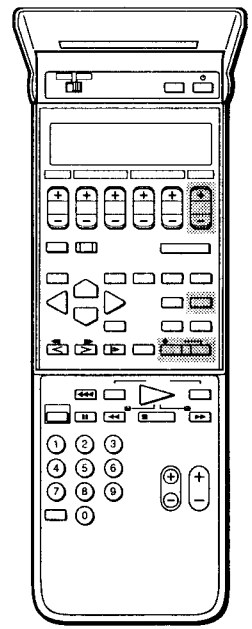

Using the Quick Timer for Recording

The Quick Timer lets you set the VCR for recording faster than the regular timer because you set the time in 30-minute units. However, unlike timer recording, quick timer recording doesn't begin automatically—you must be there to start the timer. Once you've started it, you can leave the VCR to record for the time you've set.

1 Press INPUT SELECT to light "TUNER" in the front panel display.

2 Open the drop-down panel on the VCR and press QUICK TIMER.
"TIMER" lights up and "0:00" appears in the front panel display.

QUICK TIMER button

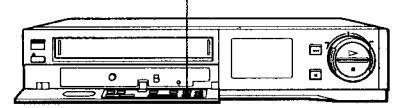

3 Press PROG +/– to select the channel to be recorded.

4 Press QUICK TIMER again. Press QUICK TIMER until the amount of time you want to record is displayed.
Thirty minutes is added to the recording time each time you press QUICK TIMER. When recording begins, "TIMER REC" appears in the front panel of the VCR. When the time you set has counted down to "0:00", recording stops.

To watch another programme during quick timer recording
Follow the procedure for "Recording While Watching Another Programme" on page 6. Start at **step 3**.
To stop quick timer recording
Press TIMER REC ON/OFF.

Saving a Recording

To keep from erasing your recorded tape, break off the safety tab on the cassette. If you later want to use the same video cassette to record, cover the slot with adhesive tape.

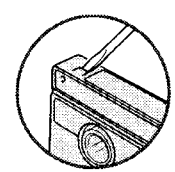
Cassette Casing

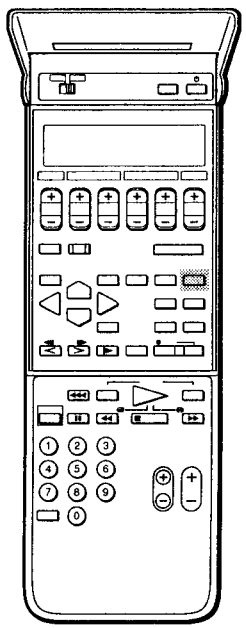

Using the VCR Before Timer Recording Begins

1 Press the TIMER REC ON/OFF button so the red indicator, "TIMER ", disappears from the front panel display of the VCR.

2 When you finish using the VCR, press the TIMER REC ON/OFF button so that "TIMER " again appears in the front panel display.
The VCR will be ready to start recording at the time you have set.

VPS Recording (German Models)

The German broadcasting system transmits VPS (Video Programme System) signals with all its TV programmes. These signals assure your timer recordings are made regardless of broadcast delays, early starts, or broadcast interruptions. For example, if an urgent news bulletin interrupts a regular programme, recording will stop. As soon as the interrupted programme resumes, recording starts again.

1 Make sure the "TIMER " indicator is not lit in the front panel display.

2 Before setting the timer to record, press VPS ON/OFF so that the "VPS" indicator lights in the front panel display.

3 Set the timer according to the instructions under "Recording TV Programmes Using the Timer" (page 7).
The VCR will be standing by for VPS recording well before the turn-on time so as to be ready if there is a change in the start time.

Notes on VPS Recording

- If recording times overlap due to a VPS time shift, the programme that was broadcast first has priority. The second programme will begin to record only when the first programme has finished.
- The VPS button is effective only when TIMER REC does not light up in the display window.
- If the VCR cannot receive a VPS signal because the signal is too weak or because the station failed to transmit VPS signals, the VCR will record the programme without the VPS function regardless of the VPS indication in the front panel display.

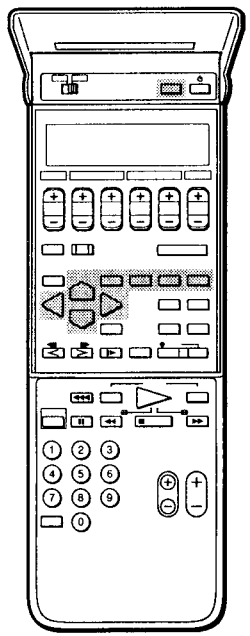

Checking or Changing Timer Settings

You can check, erase, change, or add TV programmes to be recorded. First, look at the Program List to check which programmes are set up for timer recording.

1 Press TIMER REC ON/OFF.
The red "TIMER" indicator in the front panel disappears.

2 Turn on the TV and VCR.

3 Press the TV/VTR button (on the remote control) several times until "VTR" appears in the front panel display. (If your VCR has an aerial connection instead of a EURO-AV connection, turn to the video channel you set the VCR to in "Tuning the VCR to Your TV" in **Getting Started**.)

4 Press TIMER ON SCREEN.
The Program List appears.

Programme List on Your TV Screen

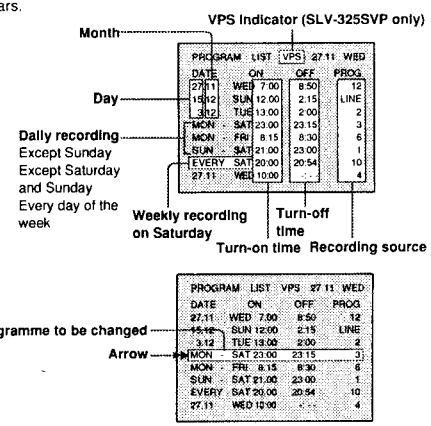

5 Press TIMER REC CHECK.
The arrow "▶" appears beside a listing.

6 Use the CURSOR keys to move the arrow to the setting you want to change or erase.

7 To erase the setting, press TIMER REC CLEAR.
To change the setting, simply re-enter the items you want changed using the remote control while referring to **steps 3** through **8** in "Recording TV Programme Using the Timer" on page 7.

8 If there are other timer settings still on the list, press TIMER REC ON/OFF to re-activate the timer.
"TIMER" will light in the VCR front panel display.

Advanced Operations

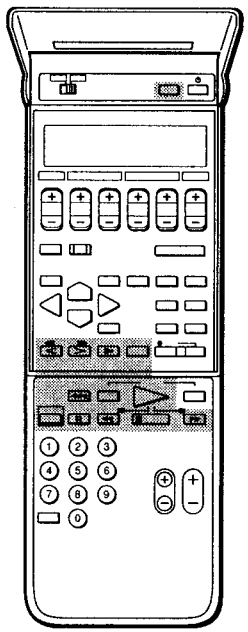

Replaying, Searching, and Variable Speed Play

To resume normal playback for any of these functions, press PLAY.
Also note that while you're rewinding the tape, you can watch TV by pressing the TV/VTR button or turning to the video playback channel.

Speed	Description	Rewind	Forward
Replay	The VCR replays in slow-motion the last two seconds of the scene just played.	Press **REPLAY**	not available
Slow	The tape rewinds or advances at slower-than-normal speed and you can see what's on the tape.	Press **SLOW** and **◀II FRAME**	Press **SLOW**
2X Normal	The tape rewinds or advances at two times normal speed, and you can see what's on the tape.	Press **X2** and **◀II FRAME**	Press **X2**
Fast	The tape rewinds or advances rapidly, and you can see what's on the tape.	Press **SEARCH** or press and hold **◀◀ REW**	Press **SEARCH** or press and hold **▶▶ FF**
Very Fast	The tape rewinds at a very high speed, but you cannot see what's on the tape.	Press **◀◀◀ HI-SPEED REWIND**	not available
Frame-by-Frame	A scene plays one frame at a time.	Press **PAUSE**, then press **◀II FRAME**	Press **PAUSE**, then press **II▶ FRAME**
Variable Speed	A scene plays at varying speeds.	Press **▶ PLAY**, then turn the **DUAL MODE SHUTTLE** to the left.	Press **▶ PLAY**, then turn the **DUAL MODE SHUTTLE** to the right.

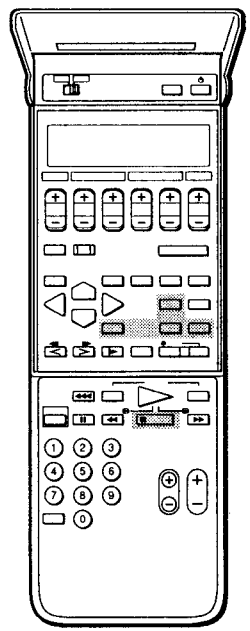

Using the Time and Tape Counters

The time/tape-counter display may appear on your TV screen when you first turn on the VCR. The tape counter screen display tells you the approximate amount of tape left. The time counter screen display tells you how much time the tape has been recording or playing. Note that the time-counter only counts those sections of the tape where something has been recorded and cannot be reset to zero as can the tape counter (below).

The Data Screen with Tape Counter Display

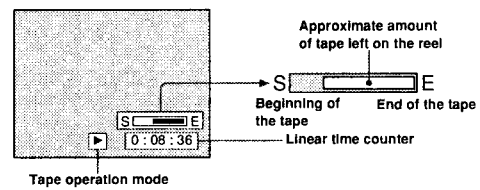

Displaying the Time/Tape-Counter

Press DATA SCREEN on the remote control.
The time/tape-counter display appears on screen. If it is already on screen, it disappears.

Using the Tape Counter

Unlike the screen tape counter, the front panel tape counter lets you reset to zero. Use it when you want to find a certain place on the tape, such as when you finish recording.

1 Press CLOCK/COUNTER to display the tape counter.

2 Press COUNTER RESET on the remote control at the location on the tape you want to find later.
The tape counter in the VCR display resets to "0H 00M 00S".

3 Press ■ STOP when you've finished recording or playing.

4 Choose either the GO TO ZERO-PLAY or GO TO ZERO-STOP option from the Auto Menu. (For how to display the Auto Menu, see "Setting the VCR to Do Multiple Functions" on page 17.)

5 Press EXECUTE.
The tape advances or rewinds to the zero point and either plays or stops, depending on the option you've chosen.

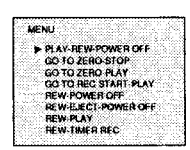

The AUTO MENU

Reading the Front Panel Display

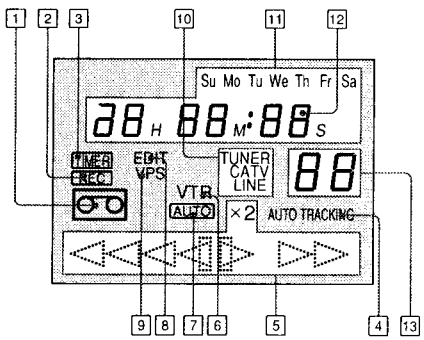

Indicator	Lights When
1 Tape indicator	a tape is in the VCR
2 REC	a tape is recording
3 TIMER	VCR is waiting to timer record
4 AUTO TRACKING	VCR has found the best tracking condition; flashes when the VCR is searching for the best tracking
5 Tape Transport indicators	VCR is rewinding, fast-forwarding, playing, pausing, high speed rewinding, etc.
6 VTR	VCR is ready to play a video tape
7 AUTO	VCR has been preset to do an automatic function
8 EDIT	VCR is ready to edit onto another tape
9 VPS	VPS button is pressed (SLV-325VP models only)
	Shows
10 LINE/TUNER	which input source you have chosen—TUNER, CATV (cable television), or LINE (another VCR, etc.)
11 Tape counter	how long a tape has been playing or recording
12 Clock	current time
13 Programme Position	programme number the VCR is tuned to when TUNER is lit (this is the programme number you assigned the channel to in ***Getting Started***)

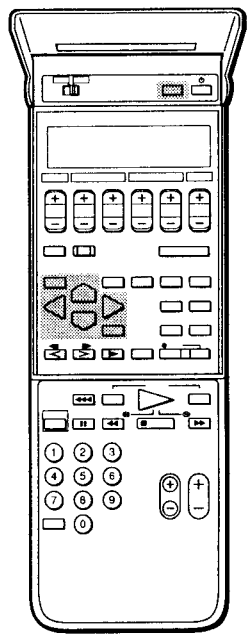

Understanding the On-Screen Menus

The SLV-325 VCR provides you with easy-to-use on-screen menus. These menus are lists of optional procedures or choices for performing advanced functions. Make menu choices using the CURSOR keys on the remote control.

1 Turn on the TV and VCR.

2 Press the TV/VTR button (on the remote control) several times until "VTR" appears in the front panel display. (If your VCR has an aerial connection instead of a EURO-AV connection, turn to the video channel you set the VCR to in "Tuning the VCR to Your TV" in **Getting Started**.)

3 Press MENU.
The MENU appears on the TV screen.

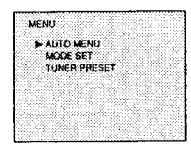

The MENU

4 Move the arrow to the menu option you would like to see on screen. (See "Menu options" below for descriptions of the choices.)

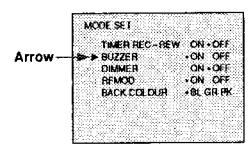

The MODE SET Menu

5 Press EXECUTE once you have selected your option.
The menu selected appears on-screen.

6 Press EXECUTE again when you finish.
The screen you were watching before you started selecting menus reappears.

Menu Options

Use the Up/Down or Left/Right CURSOR keys to choose menu options.

AUTO	MODE SET	TUNER PRESET
Use the **AUTO MENU** to have the VCR do a sequence of tape transport functions automatically. (See "Setting the VCR to Do Multiple Functions", p. 17)	• Choose **TIMER REC-REW** to automatically rewind the tape after timer recording. • Choose **BUZZER** to turn on or off the warning beep that is given when you press invalid keys, the VCR enters certain modes, or when programmed information has properly registered in the VCR. • Choose **DIMMER** to increase or decrease the brightness of indications in the front panel display. • Choose **RF MOD, OFF** if you have made a EURO-AV connection and if the TV picture shows interference.* • Choose **BACK COLOUR** to change the background colour of the TV data screen. The choices are: BL (blue-factory setting), GR (green), or PK (pink).	• Choose **NORMAL/CATV**** and **CHANNEL SET** to put channel numbers into the VCR's memory. (See "Tuning the TV to the Required Stations", in ***Getting Started***. • Choose **AFT** and **FINE-TUNING** to fine-tune the VCR picture. (See "Fine-Tuning the Picture," p. 18)

** CAUTION: Do not switch off the RF MOD if you don't have a EURO-AV connection; otherwise, there will be no playback picture.*

*** On all except SLV-325UB models*

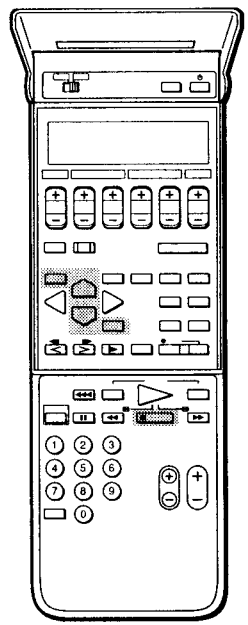

Setting the VCR to Do Multiple Functions

You can preset the VCR to do a series of tape transport functions automatically. This is convenient if you don't have time to attend to the VCR.

1 Press ■ STOP on the remote control.

2 Press MENU while the VCR is in stop mode.
The MENU is displayed on screen.
If the VCR is not in stop mode, a short beep sounds.

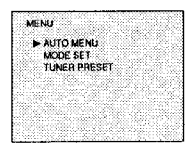

The MENU

3 Press EXECUTE.
The Auto MENU appears.

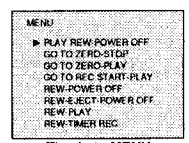

The Auto MENU

4 Use the Up/Down CURSOR keys, to choose one of the following options:

PLAY-REW-POWER OFF
The tape plays, rewinds and the VCR shuts off.

GO TO ZERO-STOP
The tape advances or rewinds to the "0" point on tape counter and stops. (Use this option when you've set the tape counter to "0 " to mark a certain place on the tape. See "Using the Tape Counter" on page 13.)

GO TO ZERO-PLAY
The tape advances or rewinds to the "0" point on the tape counter, and starts playing from that point. (See "Using the Tape Counter" on page 13.)

GO TO REC- START-PLAY
The tape advances or rewinds to the beginning of a recorded programme and plays back from that point.

REW-POWER OFF
The tape rewinds to the beginning and the VCR shuts off.

REW-EJECT-POWER OFF
The tape rewinds, the cassette ejects, and the VCR shuts off.

REW-PLAY
The tape rewinds to the beginning and plays.

REW-TIMER REC
The tape rewinds and then the VCR begins recording at the date and time you set with the timer.

5 Press EXECUTE.
The selected operation begins, and "AUTO" lights up in the front panel display.

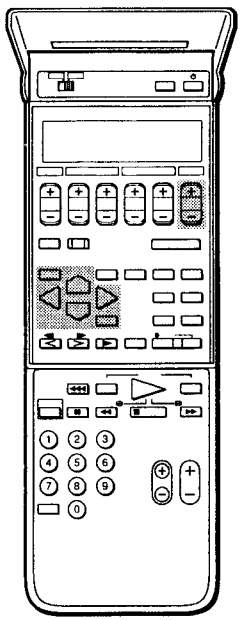

Fine-Tuning the Picture

If after using the TV controls, you cannot get a clear TV picture, use AFT (Automatic Fine-Tuning) or manual fine-tuning to adjust the picture. While AFT is faster, manual fine-tuning gives you greater control.

1 Press PROG +/– to tune in the weak channel.

2 Display the TUNER PRESET menu on the TV screen. (See "Understanding the On-Screen Menus" on page 15.)

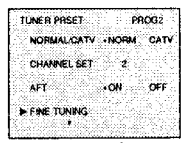

The TUNER PRESET Menu

3 Choose Automatic Fine-Tuning or Manual Fine-Tuning.

To Automatic Fine-Tune
Use an Up/Down CURSOR key to move the arrow to AFT; then use a Left/Right CURSOR key to move the dot to "ON".

To Manual Fine-Tune
Move the arrow to "FINE-TUNING". Press a Left/Right CURSOR key until you get the best picture.

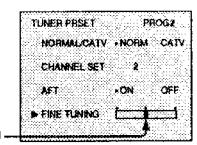

Fine-Tuning Meter

4 Press EXECUTE to store the correct tuning for that channel.

If the TV picture is still poor, and if you've made your TV-VCR connection via the EURO-AV socket, display the Mode Set menu, and choose OFF at the RF MOD (RF Modulator) option.

If the TV signal is too strong, that is, the broadcast shows on adjacent channels, with a screwdriver, set the LOCAL/DX switch, at the rear of the VCR, to LOCAL. Normally this switch is set to DX.

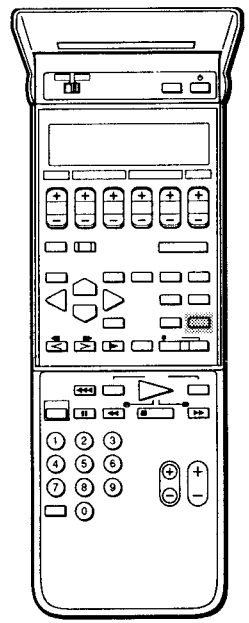

Removing Picture Distortion

Usually, the tracking control function removes picture distortion automatically. However, occasionally, streaks or "snow" may appear on the screen when you play a video tape. When this happens, you can adjust the tracking control yourself either automatically or manually. While automatic is faster, manual adjustment offers greater control.

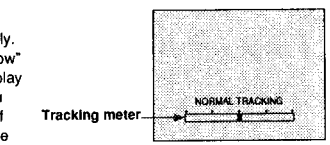

The Tracking Meter Display

Automatic Tracking Adjustment

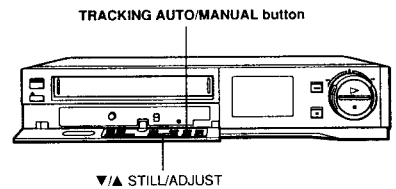

On the inside of the drop-down panel of the VCR, press AUTO/MANUAL so "AUTO TRACKING" lights in the front panel display.

"AUTO TRACKING" flashes while the VCR is searching for the best tracking condition and lights steadily when it finds the best possible tracking. If it cannot find the best tracking condition, this may mean that the tape was recorded under poor conditions. If that is the case, the picture cannot be improved.

Manual Tracking Adjustment

1 Press DATA SCREEN to display the tape counter on screen.

2 Press AUTO/MANUAL (on the inside of the VCR's drop-down panel) so that "AUTO TRACKING" disappears from the front panel display.

3 Press ▼/▲ on the TRACKING NORMAL/SLOW and STILL/ADJUST buttons to get the best picture.
The tracking meter appears on screen. The distortion should disappear as you press one of the two buttons.

If you cannot get a better picture, simultaneously press ▼/▲ on the TRACKING NORMAL/SLOW and STILL/ADJUST buttons. This returns the tracking meter to its normal position.

For Your Information

Editing Video Tapes With Another VCR

This is just a sample connection.
If your VCR has different sockets than the ones referred to in this connecting procedure, consult your local Sony dealer or local Sony service facility for how to make the best connection.

To record video tapes from one VCR to another, connect the VCRs using a 4-plug, EURO-AV type connector (Sony VMC-2104 MS: not supplied). The SLV-325 (this VCR) will function as the playback VCR and the other VCR as the recording VCR.

Connecting the Two VCRs

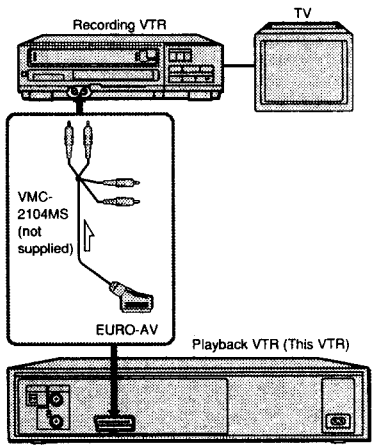

What are "Line 1 and 2" ?
If the other VCR has sockets at the front and rear for connections to other equipment, one socket is labelled "Line 1" (usually the rear one) and the other "Line 2". Whichever one you have connected the Sony SLV-325 VCR to, that is the line number you should choose on the other machine. Otherwise, just select "LINE".

1 Connect the other (recording) VCR to the TV. (Refer to the manual of the other VCR for how to connect it.)

2 Into this VCR, insert the EURO-AV connector at the terminal marked "EURO-AV" *. Take the other end of this connector and insert the yellow (video) plug into the terminal on the other VCR marked "Video In"; then, take either a red or white (audio) plug and insert it into the terminal marked "Audio In". (If it's a stereo model, plug in both the red and white plugs at the two sockets marked "Audio In".)

3 On the other machine, select the line input (Line 1 or 2) depending on the connection you have just made. (See the explanation to the left.)

Editing

1 Into this machine (playback VCR), insert a video tape with recording on it; into the other machine (recording VCR), insert a blank tape, or one that is to be copied onto.

2 On the drop-down panel of this machine, press EDIT ON/OFF until "EDIT" appears in the front panel display.

3 On the other machine (recording VCR) find the point on the tape you want to start recording and press II PAUSE; on this machine, find the point on the tape you want to start playing and press II PAUSE.

4 On this machine, press PLAY; on the other, press RECORD.

5 Release both PAUSE buttons at the same time.
Copying begins.

** If a EURO-AV connector is already attached to your TV, disconnect it from the TV.*

Identifying the Parts and Controls

Front Panel

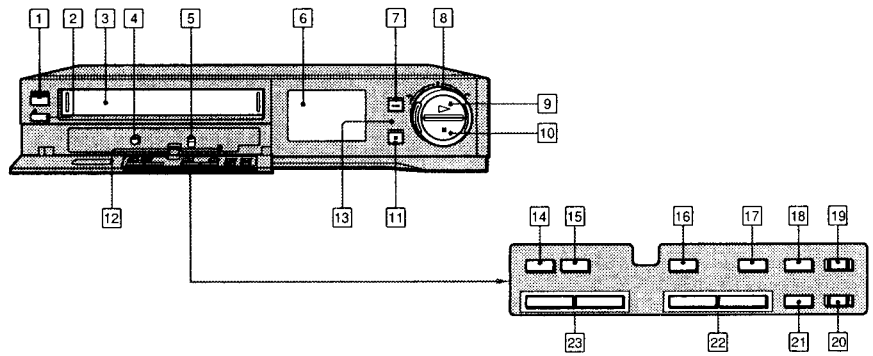

1 ⏻ ON/STANDBY switch and indicator
2 ⏏ EJECT button
3 Cassette compartment
4 SHARPNESS SOFT/SHARP control
5 COLOUR SYSTEM selector
(This switch is provided on the SLV-325VP models only.)
6 Display window
7 HI-SPEED REWIND button
8 DUAL MODE SHUTTLE ring
9 ▶ PLAY button
10 ■ STOP button
11 II PAUSE button
12 CL (clear) button
13 Remote sensor
14 TV/VTR button
15 INPUT SELECT button
16 EDIT ON/OFF button
17 VPS ON/OFF button
(This button is provided on the SLV-325VP models only.)
18 QUICK TIMER button
19 TIMER REC ON/OFF button
20 ● REC (record) button
21 TRACKING AUTO/MANUAL button
22 TRACKING NORMAL/SLOW and STILL ADJUST ▼/▲ buttons
23 PROGRAM +/– buttons

Remote Control

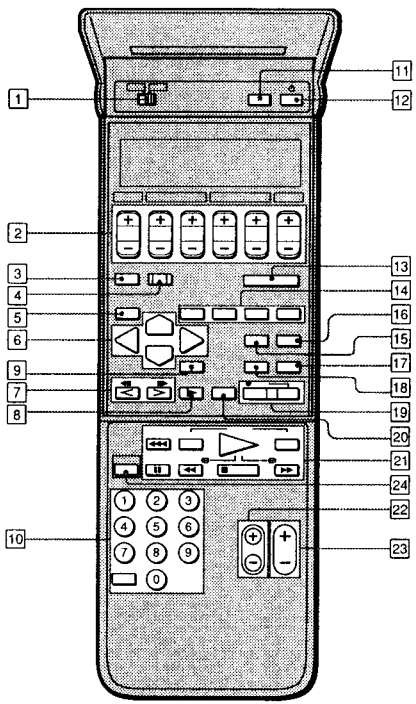

The buttons on the Remote Control with the same name or mark as those on the unit have the same function. The buttons with an orange dot can be used to remotely control Sony TVs when the TV/VTR selector is set to TV. The TV/VTR button and/or the -/- - (10's digit) button cannot operate certain Sony TVs.

1 TV/VTR selector
2 Timer recording/clock set buttons
  D (date)
  TURN ON time
  TURN OFF time
  PROG (programme position) +/–
3 TIMER SET button
4 CLOCK SET button
5 MENU button
6 CURSOR ▲/▼/◀/▶ keys
7 FRAME ◀II/II▶/</> buttons
8 I► SLOW button
9 EXECUTE button
10 Numeric keys
11 TV/VTR button
12 ⏻ (on/standby) button
13 TRANSMIT button
14 TIMER REC buttons
  TIMER ON SCREEN
  CHECK
  CLEAR
  ON/OFF
15 CLOCK/COUNTER button
16 INPUT SELECT button
17 DATA SCREEN button
18 COUNTER RESET button
19 ● REC (record) buttons
20 X2 button
21 Tape transport buttons
  II PAUSE
  ▶ PLAY
  ■ STOP
  ◀◀◀ HI-SPEED REWIND
  ⏪/⏩ SEARCH (reverse/forward)
  ◀◀ REW (rewind)
  ▶▶ FF (fast-forward)
22 PROG (programme) +/– buttons
23 VOL (volume) +/– buttons
24 REPLAY

Rear Panel

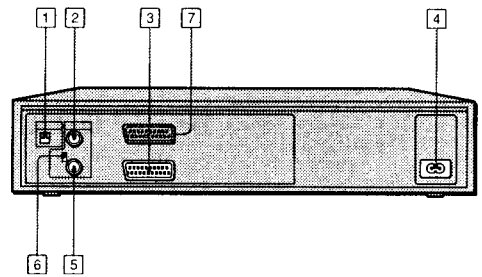

1 RF CHANNEL screw (30 - 39)
2 AERIAL OUT socket
3 ⊕ EURO-AV (21-pin) socket
4 AC inlet
5 AERIAL IN socket
6 LOCAL/DX switch
7 CANAL PLUS socket (on the SLV-325CP only)

SECTION 2
DISASSEMBLY

2-1. FRONT PANEL ASSEMBLY AND REMOVAL OF CABINET

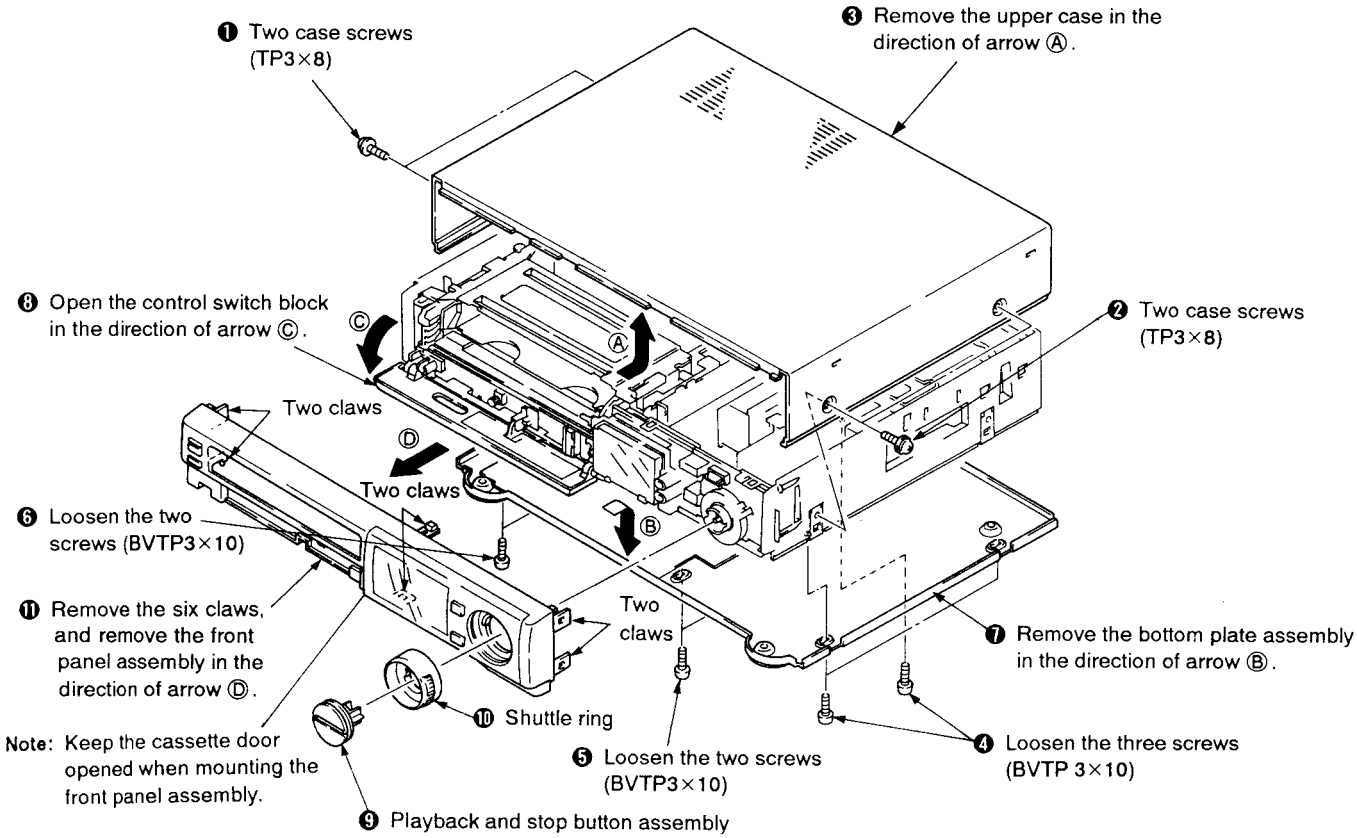

Note: Keep the cassette door opened when mounting the front panel assembly.

2-2. REMOVAL OF CONTROL SWITCH BLOCK AND MF-151/MF-152 BOARD

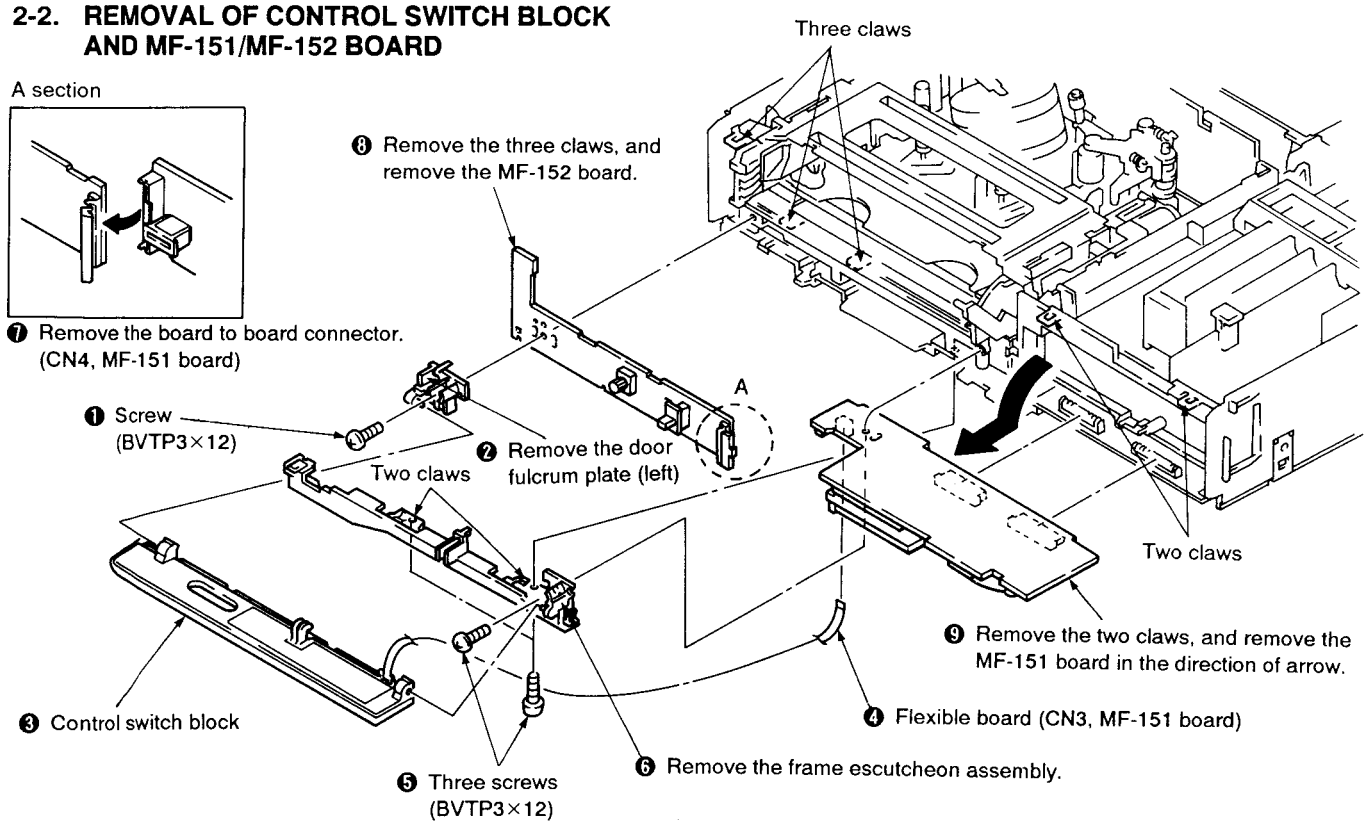

2-3. REMOVAL OF PC-54, YP-11, CV-26 AND CP-52 BOARDS

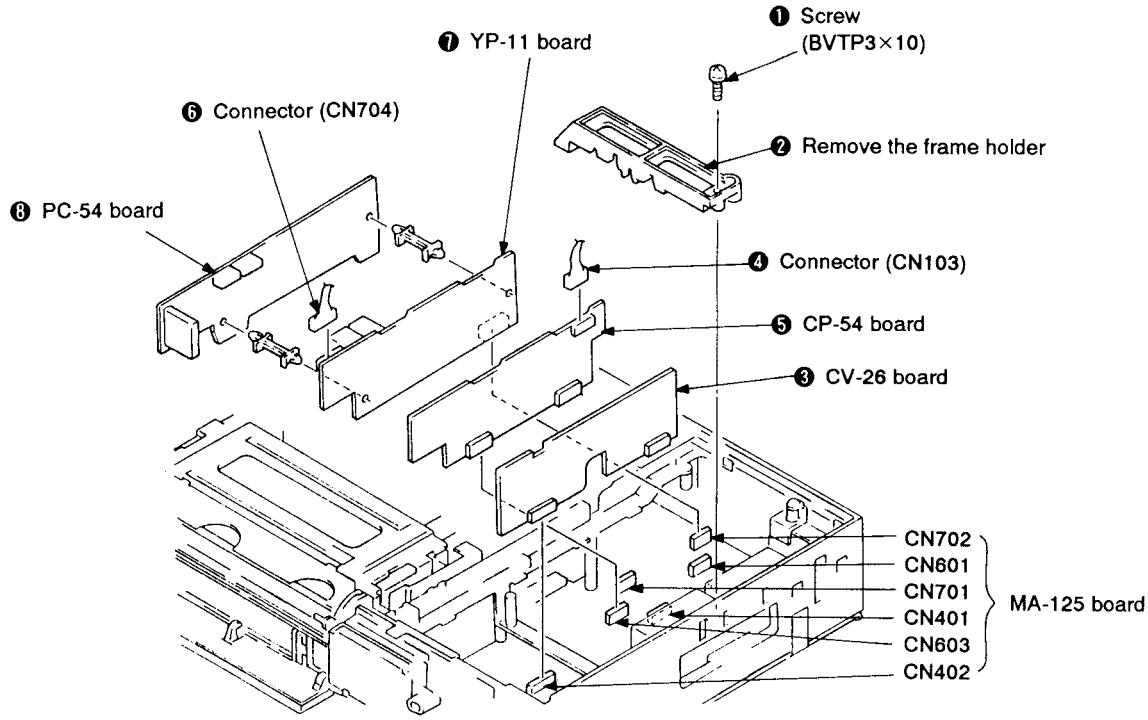

2-4. REMOVAL OF FL BLOCK ASSEMBLY

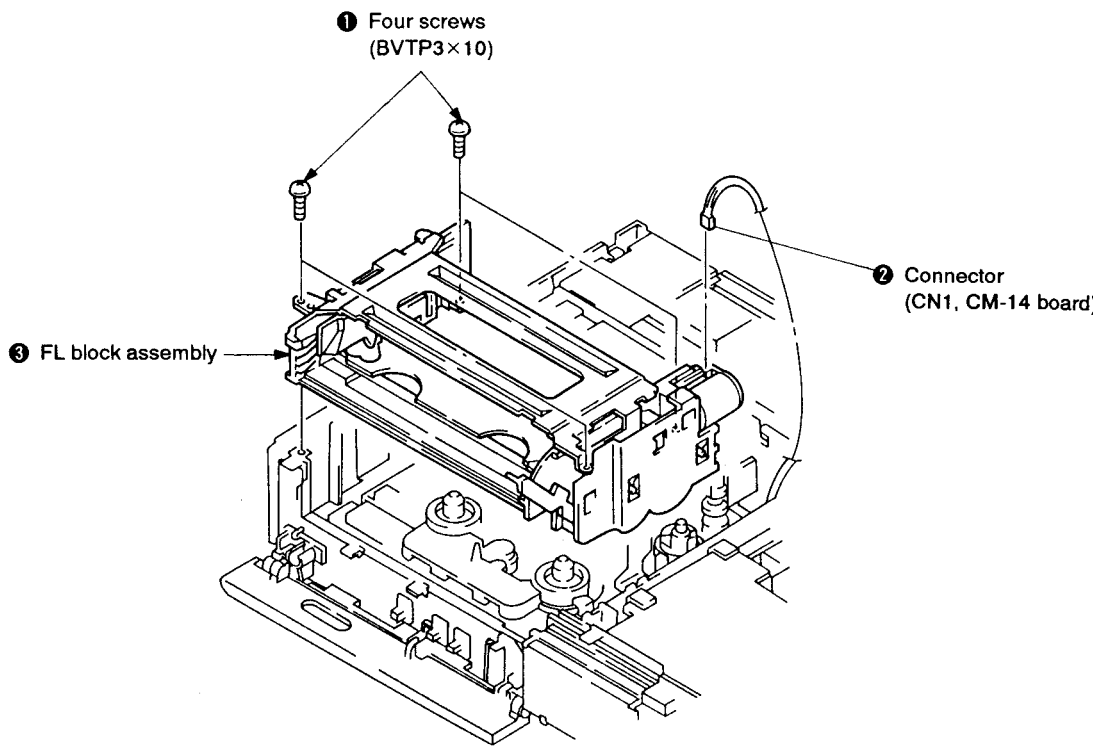

2-5. REMOVAL OF MD BLOCK

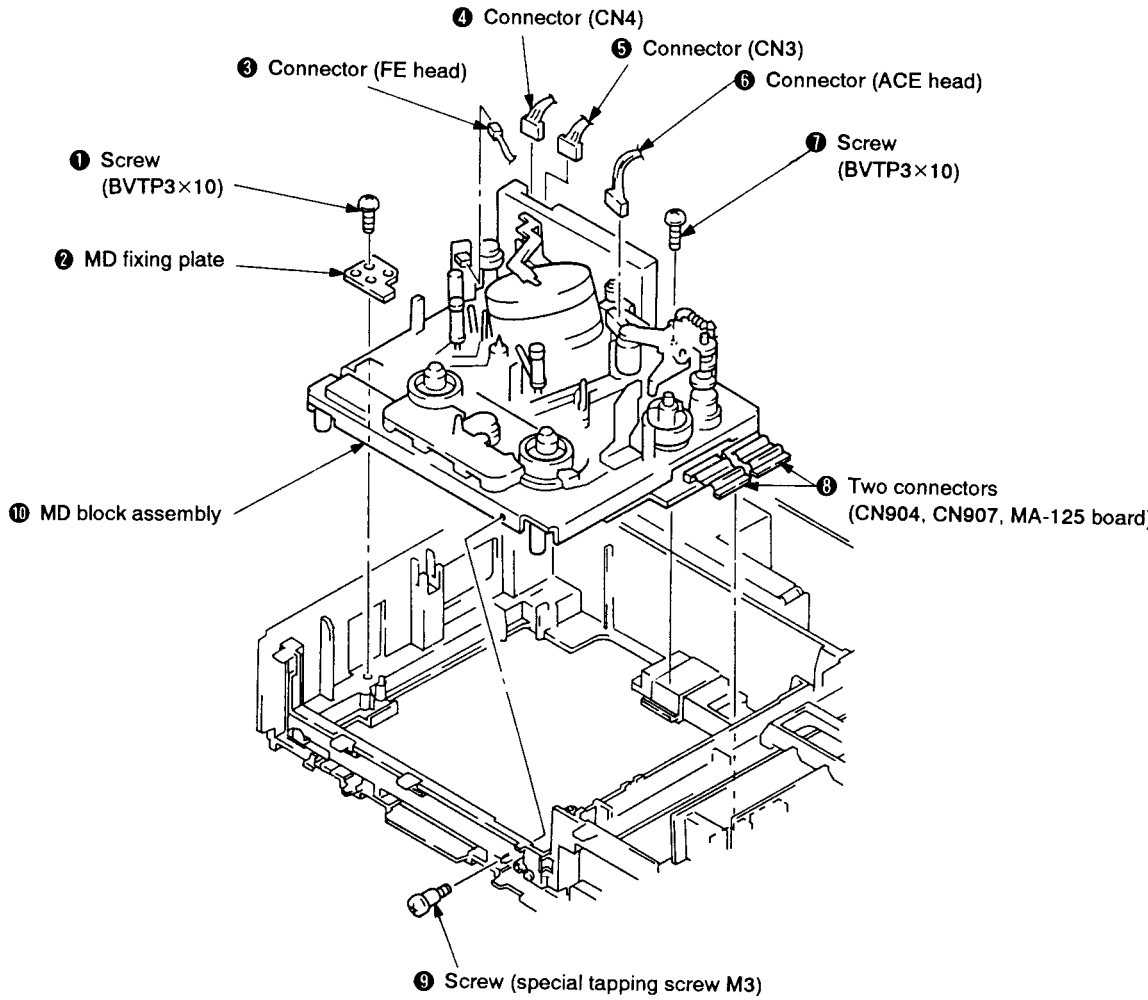

2-6. REMOVAL OF POWER BLOCK ASSEMBLY

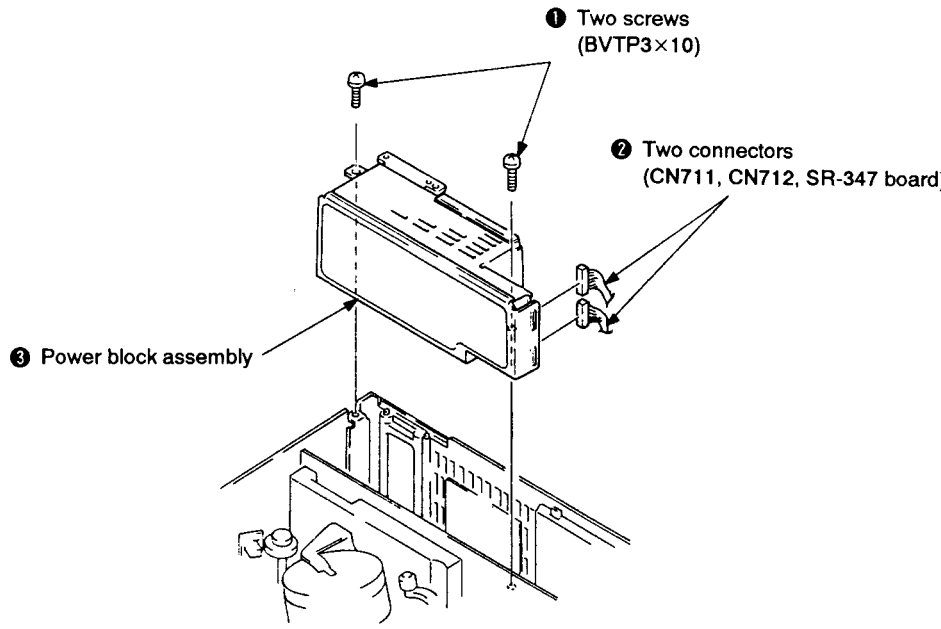

2-7. REMOVAL OF MA-125 BOARD

❶ Remove the MF-151 board according to 2-2.
❷ Remove PC-54, YP-11, CV-26 and CP-52 board according to 2-3.
❸ Remove the power supply block assembly according to 2-6.
❹ Remove the four connectors (CN301, 302, 904 and 907) from the MA-125 board.

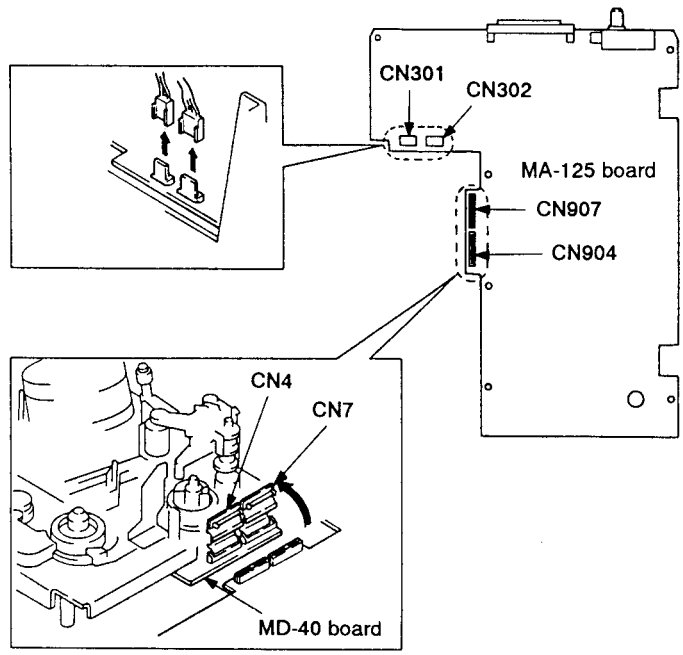

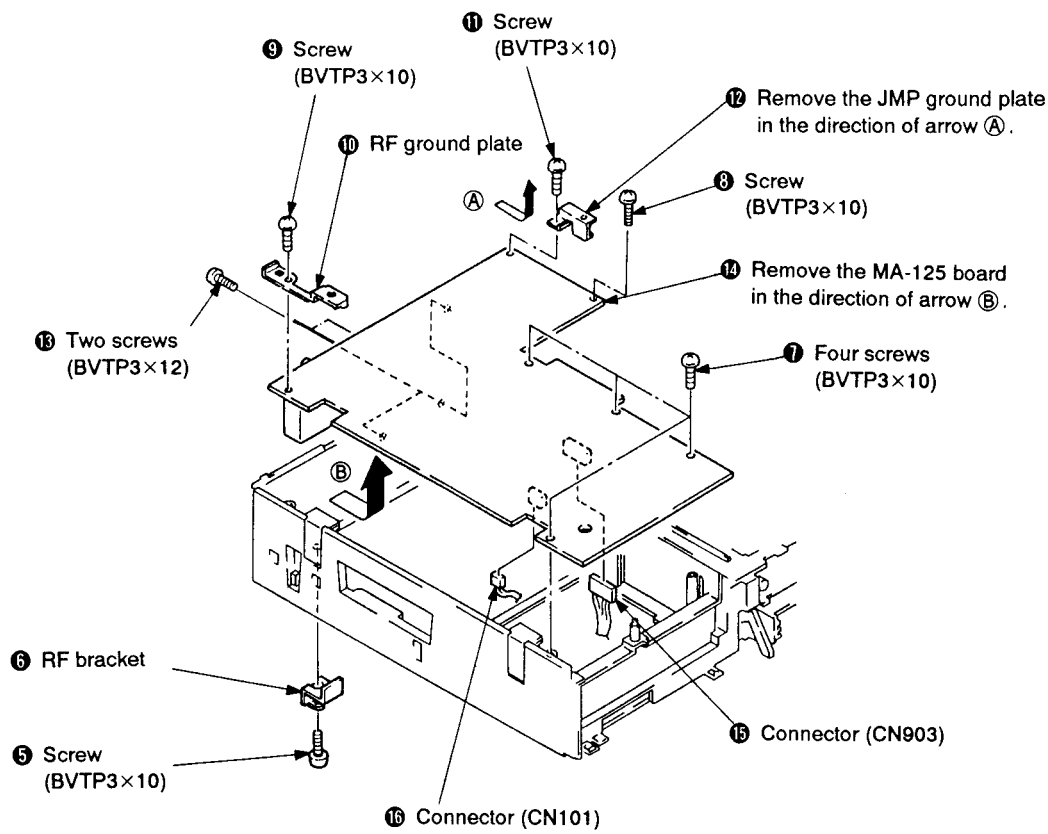

2-8. INTERNAL VIEWS

— Top Side —

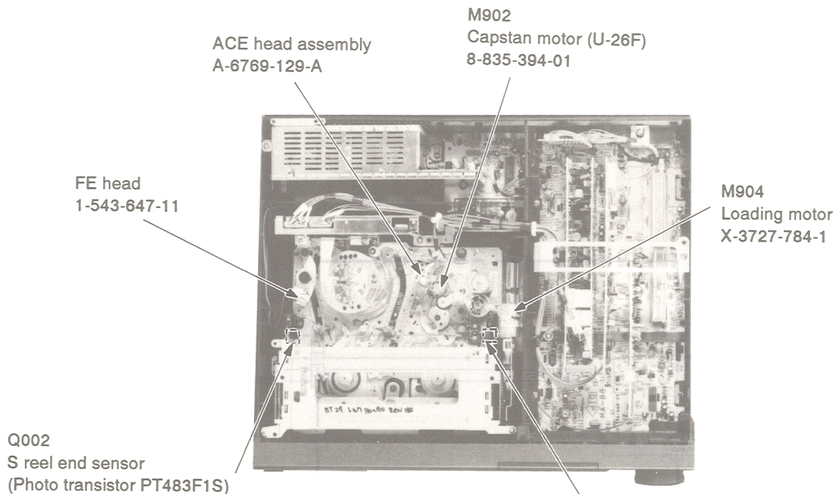

— Bottom Side —

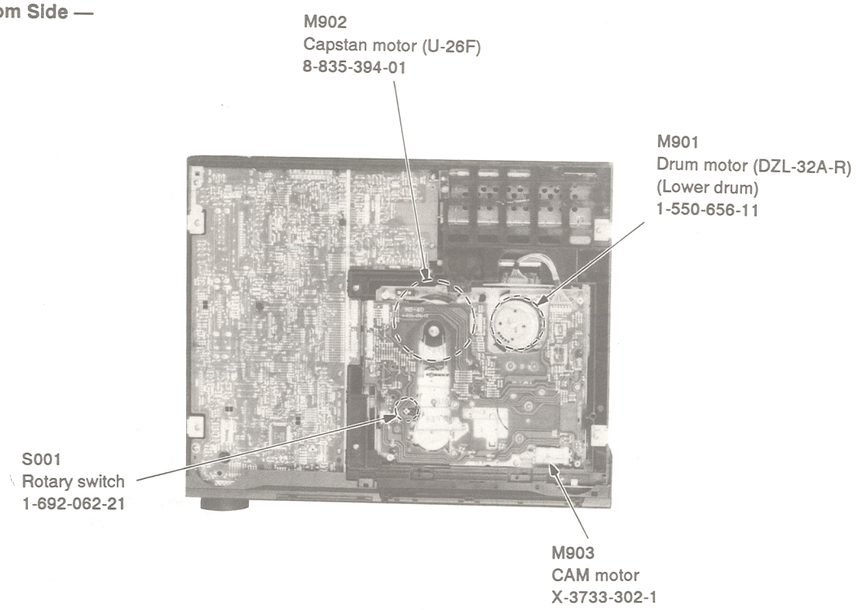

SECTION 3
DIAGRAMS

3-1. CIRCUIT BOARDS LOCATION

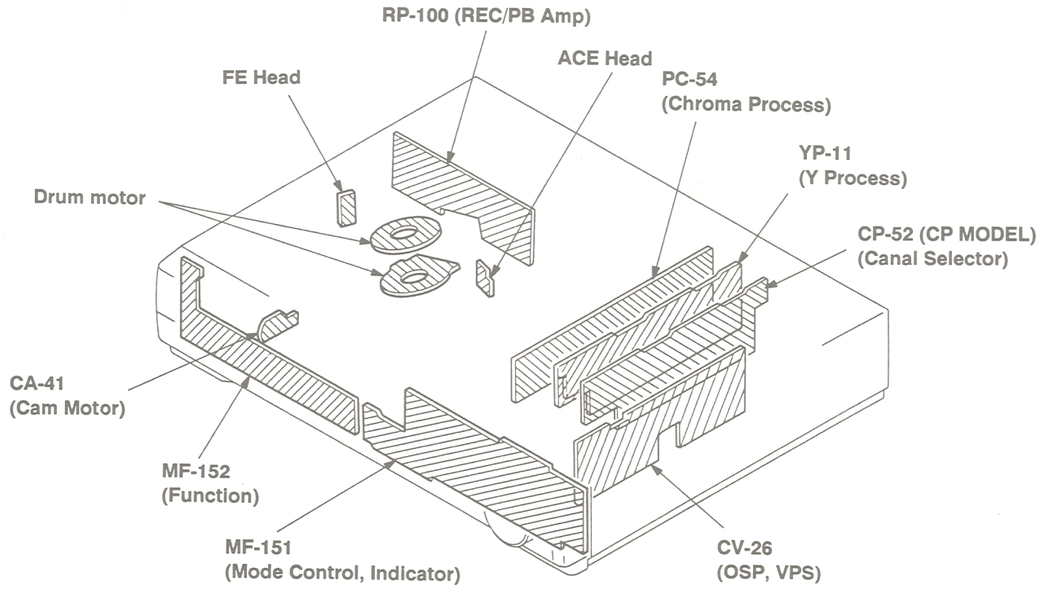

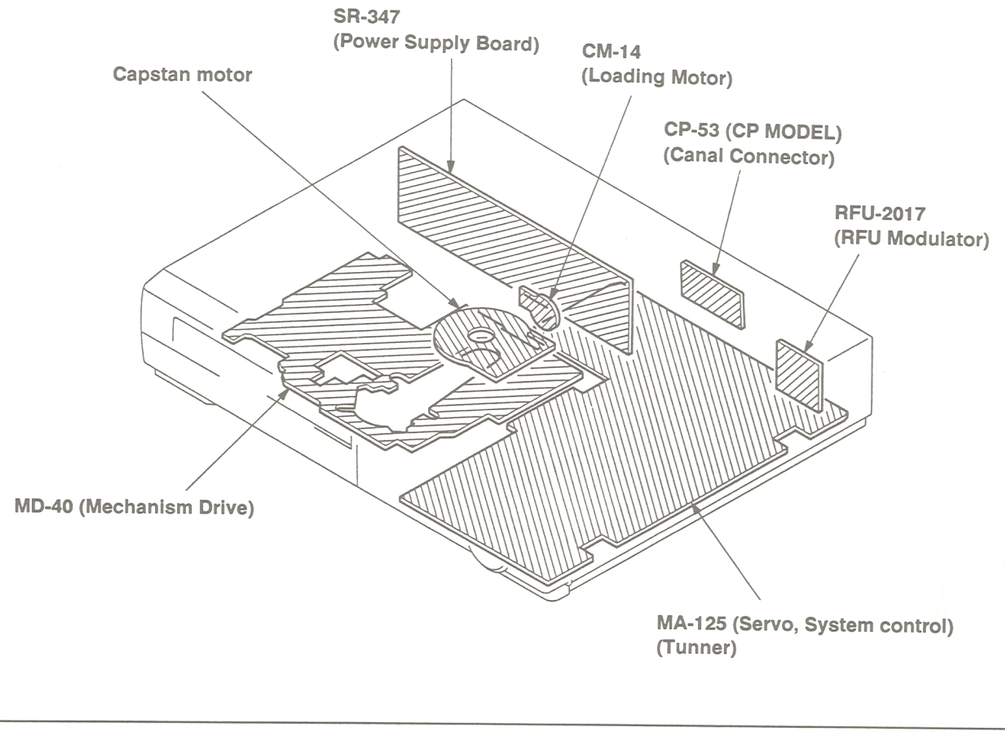

3-2. OVERALL BLOCK DIAGRAM

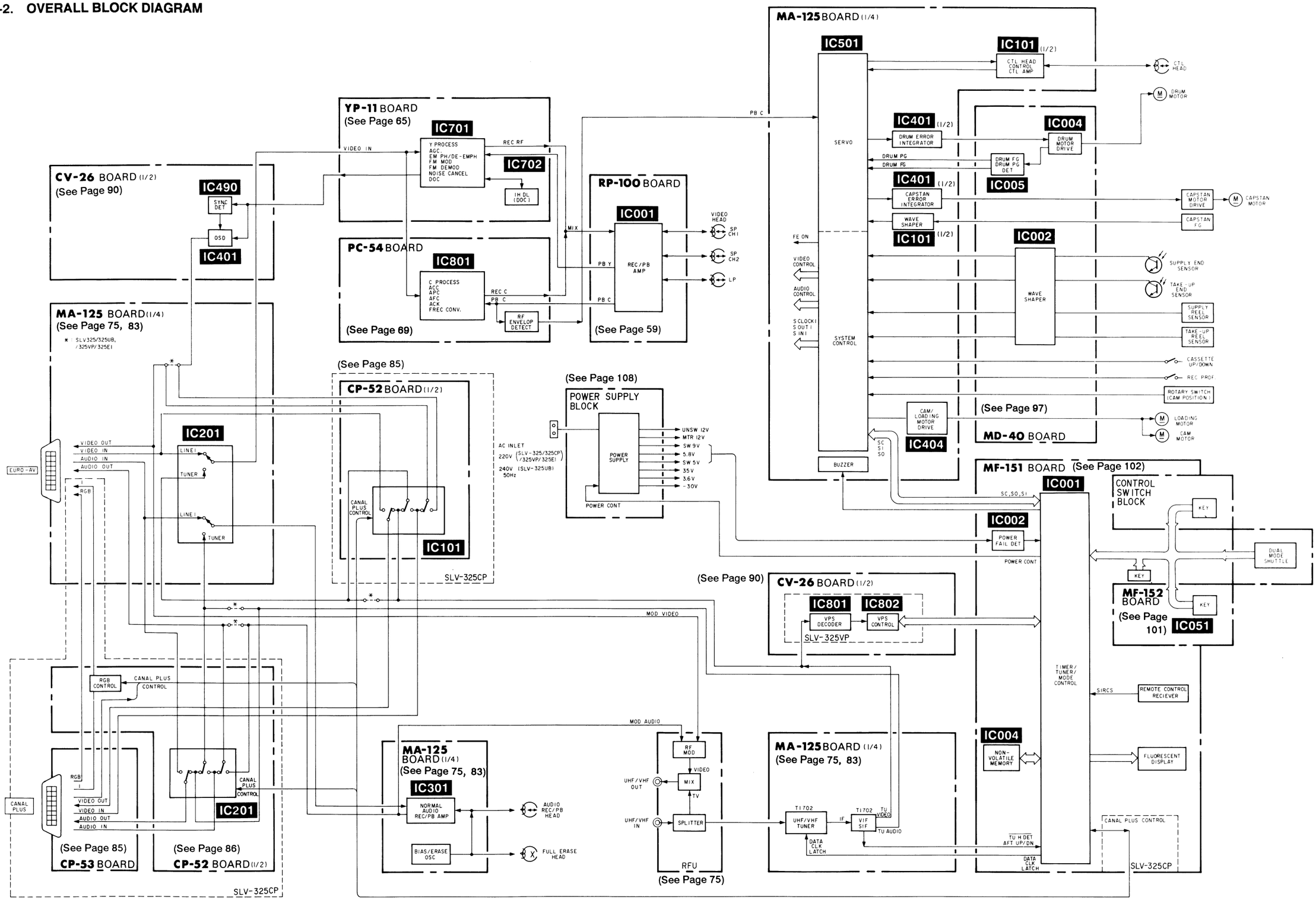

3-3. VIDEO BLOCK DIAGRAM

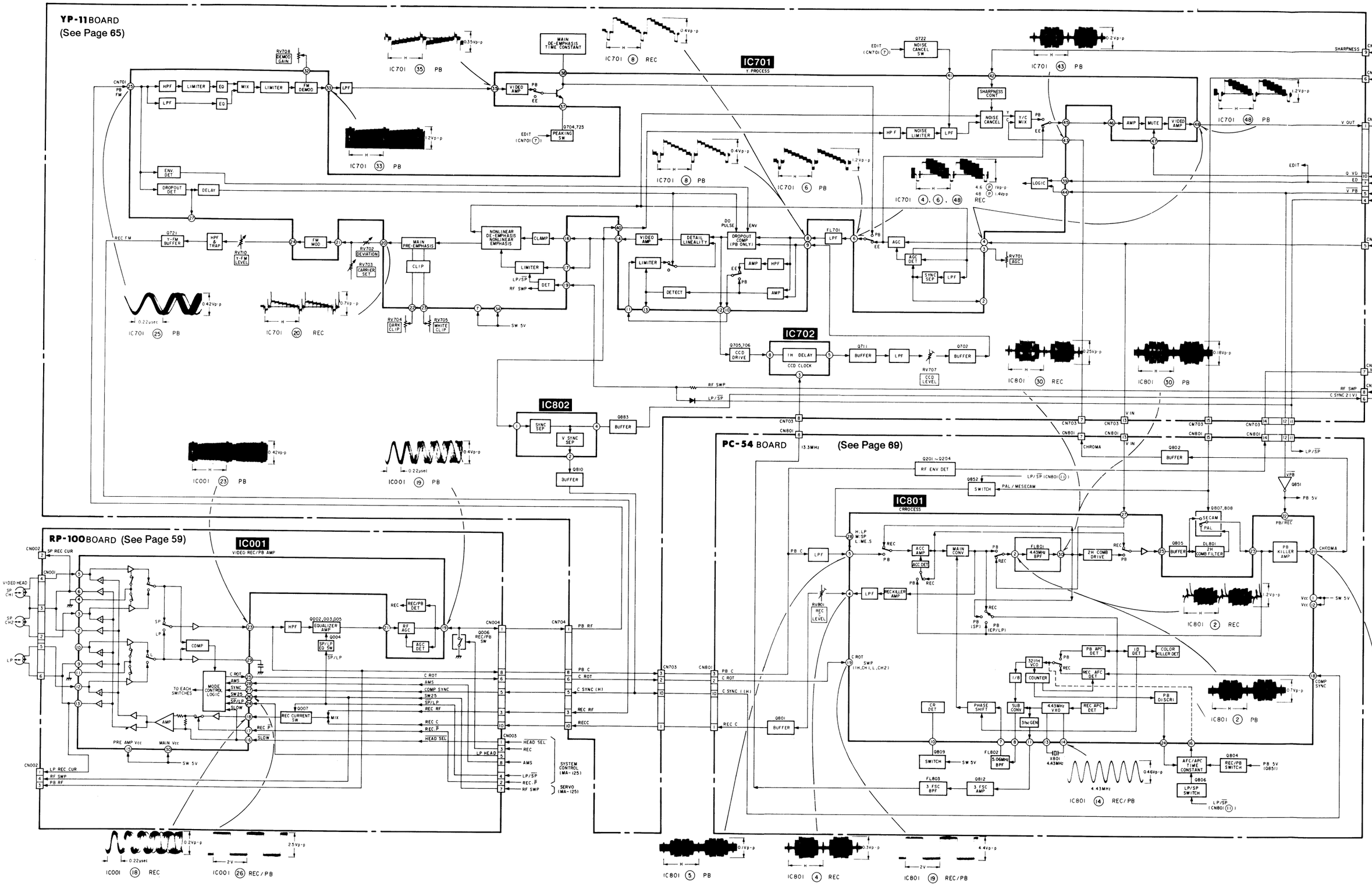

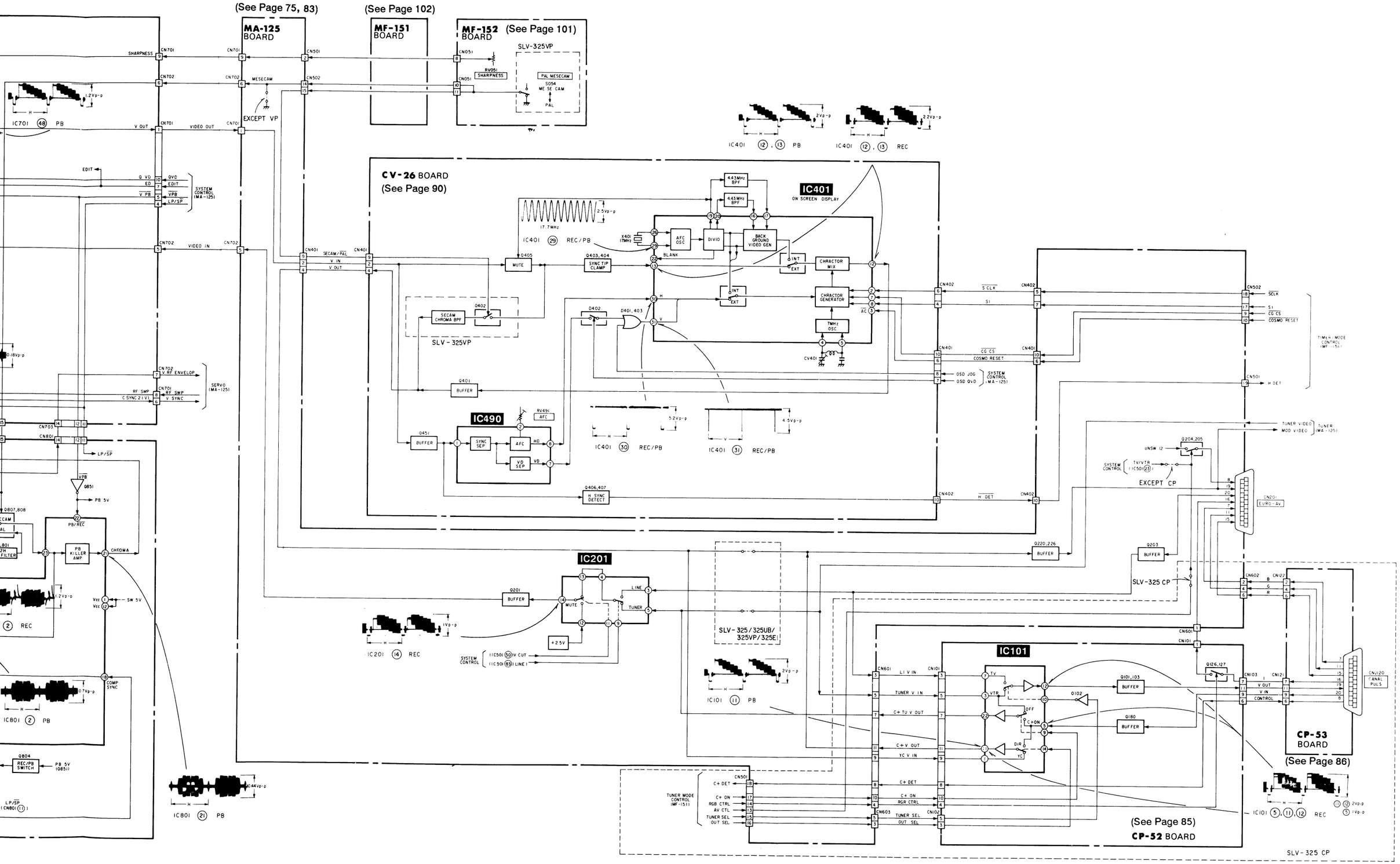
(See Page 75, 83)
MA-125 BOARD
(See Page 102)
MF-151 BOARD
MF-152 BOARD
(See Page 101)
SLV-325VP
CV-26 BOARD
(See Page 90)
IC401
ON SCREEN DISPLAY
IC490
IC201
IC101
SLV-325/325UB/
325VP/325E
CP-53 BOARD
(See Page 86)
(See Page 85)
CP-52 BOARD
SLV-325 CP
EXCEPT VP
EXCEPT CP
IC701 (48) PB
IC401 (12), (13) PB
IC401 (12), (13) REC
IC401 (29) REC/PB
IC401 (30) REC/PB
IC401 (31) REC/PB
IC201 (14) REC
IC101 (11) PB
IC801 (2) PB
IC801 (21) PB
IC101 (5), (11), (12) REC

3-4. SERVO BLOCK DIAGRAM

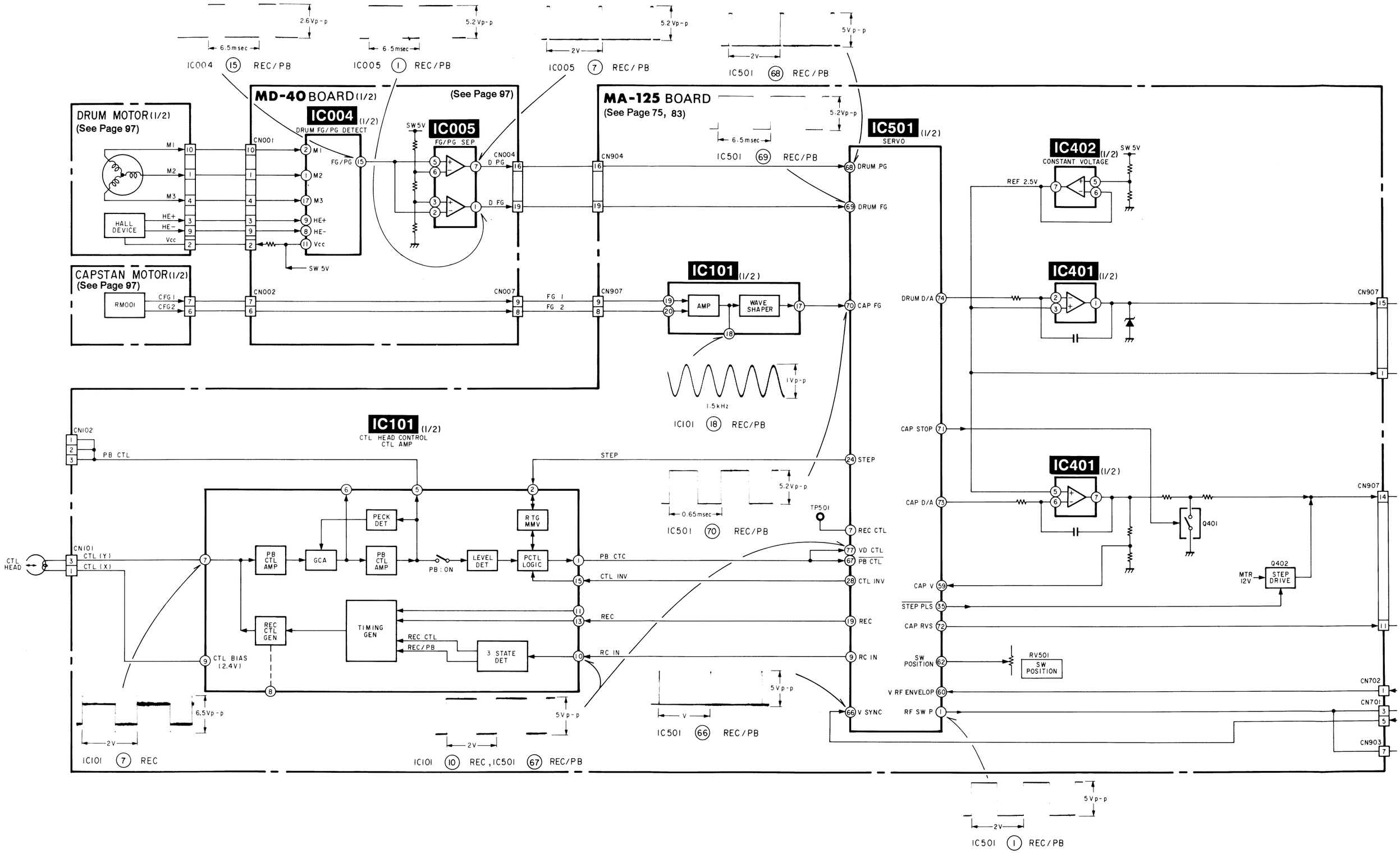

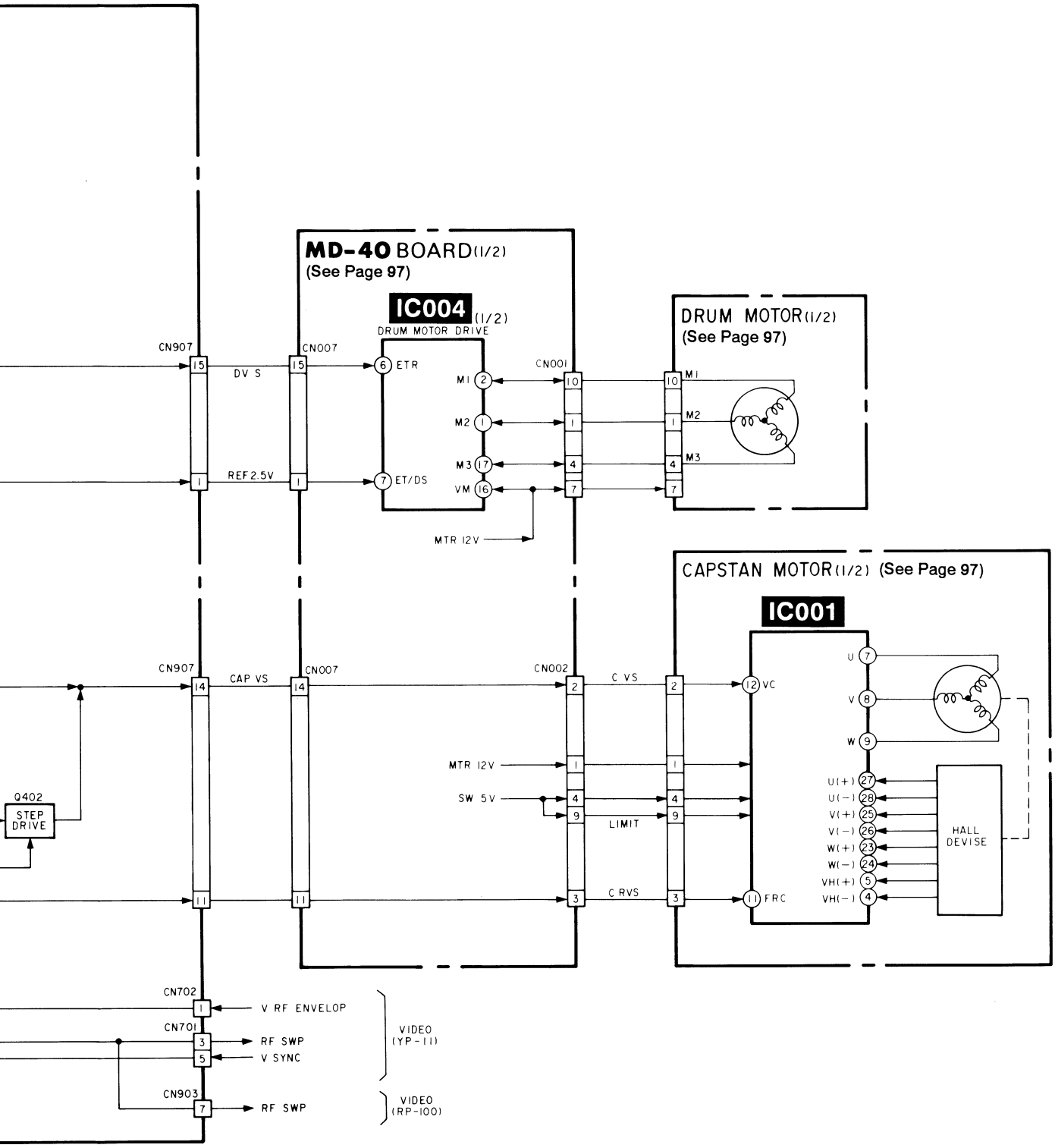
MD-40 BOARD(1/2)
(See Page 97)
IC004 (1/2)
DRUM MOTOR DRIVE
DRUM MOTOR(1/2)
(See Page 97)
CAPSTAN MOTOR(1/2) (See Page 97)
IC001
CN907
CN007
CN001
CN002
DV S
REF 2.5V
ETR
ET/DS
M1
M2
M3
VM
MTR 12V
CAP VS
C VS
C RVS
SW 5V
LIMIT
VC
FRC
U
V
W
U(+)
U(−)
V(+)
V(−)
W(+)
W(−)
VH(+)
VH(−)
HALL DEVISE
Q402
STEP DRIVE
CN702
V RF ENVELOP
CN701
RF SWP
V SYNC
CN903
RF SWP
VIDEO (YP-11)
VIDEO (RP-100)

3-5. SYSTEM CONTROL BLOCK DIAGRAM

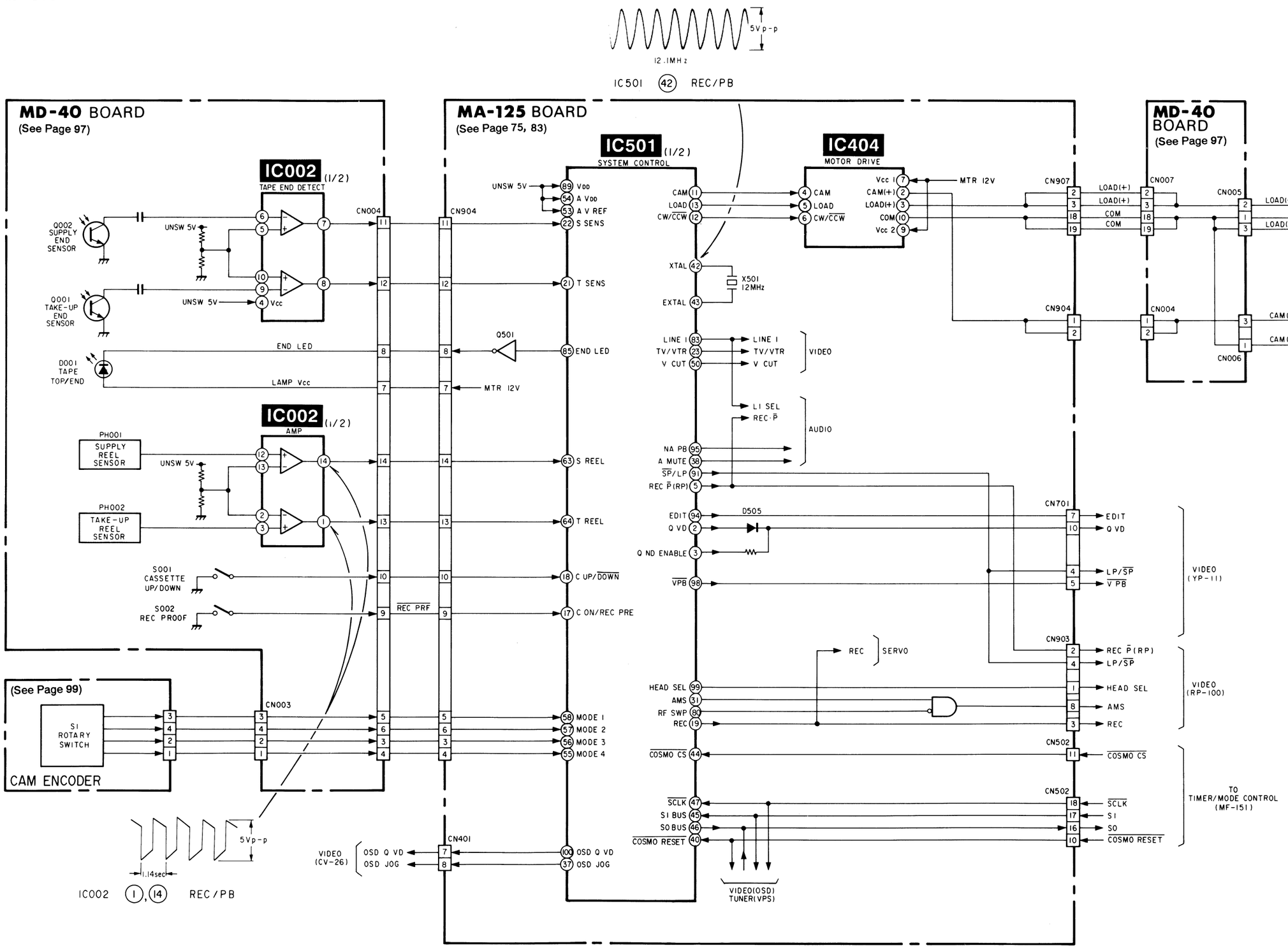

3-6. SYSTEM CONTROL MICROCOMPUTER (CXP80624:IC501 on MA-125 Board) PORT FUNCTION DESCRIPTION

PIN No.	PORT	I/O	SIGNAL	DESCRIPTION
1	PPO 13	O	RF SWP	RF switching pulse
2	PPO 12	O	Q VD	Quasi VD signal
3	PPO 11	O	Q HD ENBL	Quasi HD enable signal
4	PPO 10	O	$\overline{\text{AF REC•P}}$	Not Used (OPEN)
5	PPO 9	O	REC•$\overline{\text{P}}$ (RP)	REC:H
6	PPO 8	O	—	Not Used (OPEN)
7	RTO 7	O	REC CTL	REC CTL signal
8	PC 6	O	COLOR CNT	Not Used (OPEN)
9	PC 5	O	RC IN	REC:REC CTL, others:HI-Z
10	PC 4	O	—	Not Used (OPEN)
11	PC 3	O	CAM	Cam motor select signal
12	PC 2	O	CW/CCW	Rotation direction set
13	PC 1	O	LOAD	Loading motor select signal
14	PPO 16	O	AF. SWP	Not Used (OPEN)
15	PJ 7	O	$\overline{\text{STEREO}}$	Not Used (OPEN)
16	PJ 6	O	$\overline{\text{BILING}}$	Not Used (OPEN)
17	PJ 5	I	C ON/REC PRF	Cassette on/rec proof switch
18	PJ 4	I	C UP/DOWN	Cassette up/down switch
19	PJ 3	O	REC	REC:H
20	PJ 2	O	V MUTE	Not Used (OPEN)
21	PJ 1	I	T SENS	T end sensor
22	PJ 0	I	S SENS	S end sensor
23	PD 7	O	$\overline{\text{TV/VTR}}$	TV/VTR switch VTR:H
24	PD 6	O	STEP	H when step is operation
25	PD 5	O	—	Not Used (OPEN)
26	PD 4	O	—	Not Used (OPEN)
27	PD 3	O	NA REC $\overline{\text{P}}$	Not Used (OPEN)
28	PD 2	O	CTL INV	CTL inversion signal
29	PD 1	O	MONI (R)	Not Used (OPEN)
30	PD 0	O	MONI (L)	Not Used (OPEN)
31	PH 7	O	AMS	AMS control (O.D)
32	PH 6	O	$\overline{\text{HIFI MIX}}$	Not Used (OPEN) (O.D)
33	PH 5	O	—	Not Used (OPEN) (O.D)
34	PH 4	O	—	Not Used (OPEN) (O.D)
35	PH 3	O	STEP PLS	Step pulse output (O.D)
36	PH 2	O	$\overline{\text{FULL ERASE}}$	Not Used (OPEN) (O.D)
37	PH 1	O	OSD JOG	Variable speed playback:Hiz (O.D)
38	PH 0	O	A MUTE	MUTE:HiZ (O.D)
39	MP	O	—	~GND
40	$\overline{\text{RST}}$	I/O	$\overline{\text{COSMO RESET}}$	RESET:L
41	Vss			~GND
42	XTAL			12 MHz
43	EXTAL			12 MHz
44	$\overline{\text{CSO}}$	I	$\overline{\text{COSMO CS}}$	
45	$\overline{\text{SIO}}$	I	SI BUS	Serial data (TIMER → SYSCON)
46	$\overline{\text{SOO}}$	O	SO BUS	Serial data (SYSCON → TIMER)
47	$\overline{\text{SCKO}}$	I/O	$\overline{\text{SCLK}}$	Serial data transfer clock
48	AN 11	I	METER (L)	Not Used (~47KΩ ~GND)
49	AN 10	I	METER (R)	Not Used (~47KΩ ~GND)

PIN No.	PORT	I/O	SIGNAL	DESCRIPTION
50	PF 5	O	VCUT	V CUT:L
51	AN 8	I	AF SW POSI	Not Used (~47kΩ ~GND)
52	AVss			~GND
53	AVref			~+5V
54	AVDD			~+5V
55	PF 3	I	MODE 4	MD encorder input
56	PF 2	I	MODE 3	
57	PF 1	I	MODE 2	
58	PF 0	I	MODE 1	
59	AN 3	I	CAP V	Capstan drive voltage feedback input for capstan constant voltage drive.
60	AN 2	I	V RF ENVELOP	Video RF envelope signal for auto tracking
61	AN 1	I	AF ENVELOP	Not Used (~47kΩ ~GND)
62	AN 0	I	SW POSI	Switching position adjustment
63	PG 7	I	S REEL	Supply reel FG signal
64	PG 6	I	T REEL	Take-up reel FG signal
65	PG 5	I	DEW	Not Used (~47kΩ ~+5V)
66	SYNCO	I	V SYNC	Vertical sync input for servo operation. etc
67	$\overline{\text{PBCTL}}$	I	$\overline{\text{PB CTL}}$	PB CTL signal for capstan phase servo
68	D PG	I	DRUM PG	DRUM PG signal for drum phase servo
69	D FG	I	DRUM FG	DRUM FG signal for drum speed servo
70	C FG	I	CAP FG	CAPSTAN FG signal for capstan speed servo
71	PE 7	O	CAP STOP	Capstan stop:H
72	PE 6	O	CAP REV	Capstan reverse:H
73	DAA 1	O	CAP D/A	Capstan error output
74	DAA 0	O	DRUM D/A	Drum error output
75	PE 3	O	SKEW ON	Not Used (OPEN)
76	PE 2	O	—	Not Used (OPEN)
77	$\overline{\text{EC}}$	I	VD CTL	VD CTL signal for counter
78	PE 0	I	TEST	Not Used (~47kΩ ~+5V)
79	SI 1	I	SI 2	Not Used (~47kΩ ~+5V)
80	SO 1	O	SO 2	Not Used (~47kΩ ~+5V)
81	SCK 1	I/O	$\overline{\text{S CLK}}$	Not Used (~47kΩ ~+5V)
82	INT 1	I	INDEX CS	Not Used (~47kΩ ~+5V)
83	PI 3	O	LINE 1	LINE:H, TUNER:L
84	PI 2	O	LINE 2	Not Used (OPEN)
85	PI 1	O	END LED	Tape end sensor LED drive signal
86	PCK	I	OSC 1	Not Used (~47kΩ ~GND)
87	PK 0	I	OSC 0	Not Used (~47kΩ ~GND)
88	Vss			~GND
89	VDD			~+5V
91	PA 7	O	LP/$\overline{\text{SP}}$	LP:H, SP:L
92	PA 6	O	—	Not Used (OPEN)
93	PA 5	O	LP HEAD	Not Used (OPEN)
94	PA 4	O	EDIT	EDIT:H
95	PA 3	O	NA PB	Normal audio playback:H
96	PA 2	O	$\overline{\text{AF PB}}$	Not Used (OPEN)
97	PA 1	O	$\overline{\text{JOG}}$	Not Used (OPEN)
98	PA 0	O	$\overline{\text{V PB}}$	Video playback:L
99	PPO 15	O	HEAD SEL	Video head select signal
100	PPO 14	O	OSD Q VD	Quasi VD signal for OSD

3-7. TIMER/MODE CONTROL MICROCOMPUTER (CXP50116:IC001 on MF-151 Board) PORT FUNCTION DESCRIPTION

PIN No.	PORT	I/O	SIGNAL	DESCRIPTION
1	S4	O	S0	FIP segment signal
2	S5	O	S1	
3	S6	O	S2	
4	S7	O	S3	
5	S8	O	S4	
6	S9	O	S5	
7	S10	O	S6	
8	S11	O	S7	
9	S12	O	S8	
10	S13	O	S9	
11	S14	O	S10	
12	S15	O	S11	
13	S16	O	S12	
14	S17	O	S13	
15	S18	O	S14	
16	S19	O	S15	
17	S20	O	S16	
18	S21	O	S17	Not Used
19	S22	O	S18	
20	S23	O	S19	
21	T7	O	T7	
22	T6	O	T6	FIP grid signal
23	T5	O	T5	
24	T4	O	T4	
25	T3	O	T3	
26	T2	O	T2	
27	T1	O	T1	
28	T0	O	T0	
29	INT	I		Interruption from externals (Not Used)
30	TX	O	TX	Backup clock output
31	TEX	I	TEX	Backup clock input (32.768 kHz)
32	$\overline{\text{RESET}}$	I	$\overline{\text{RESET}}$	Reset input
33				
34	VDD	–	VDD	Positive power supply terminal
35	AD 0	I	AD 0	Key input reading A/D (including shuttle switch)
36	AD 1	I	AD 1	
37	AD 2	I	AD 2	
38	AD 3	I	AD 3	
39	AD 4	I	AD 4	
40	AD 5	I	AD 5	
41	AD 6	I	AD 6	
42	AD 7	I	AFT	TUNER AFT SIGNAL
43	$\overline{\text{EC}}$	I		Event count input (Not used)
44	$\overline{\text{SC}}$	O	$\overline{\text{SCLK}}$	Serial bus clock output
45	SO	O	SO (from TT)	Serial bus SOUT
46	SI	I	SI (to TT)	Serial bus SIN
47	PA 0	I	FWD/RVS	SHUTTLE DIRECTION
48	PA 1	I/O	MEM DATA	EEPROM DATA SIGNAL
49	PA 2	O	RF CTRL	RF MOD ON/OFF

PIN No.	PORT	I/O	SIGNAL	DESCRIPTION
50	PA 3	O	$\overline{\text{VPS CS}}$	VPS chip select signal
51	PF 0	O	$\overline{\text{VPS RESET}}$	VPS RESET signal
52	PF 1	O	$\overline{\text{COSMO CS}}$	COSMO CS signal
53	PF 2	O	$\overline{\text{COSMO RESET}}$	COSMO RESET signal
54	PF 3	O	$\overline{\text{CG CS}}$	CG CS signal
55	PE 0	O	PLL ENABLE	FS tuner enable output
56	PE 1	O	PLL CLOCK	FS tuner clock output
57	PE 2	O	PLL DATA	FS tuner data output
58	PE 3	O	BAND SEL	Tuner band select (Not Used)
59	PY 0	O	TV SYSTEM	TV SYSTEM select
60	PY 1	O	BUZZER	Buzzer signal
61	PY 2	I	POWER FAIL	Service interruption detection
62	PY 3	I	SIRCS IN	Remote control input
63	PD 0	I	MESECAM	NOT USED
64	PD 1	I/O	SECAM/$\overline{\text{PAL}}$	NOT USED
65	PD 2	I	$\overline{\text{HDET}}$	VIDEO H sync DETECT input
66	PD 3	I	C+DET	C+ DETECT input
67	PC 0	O	C+ON	C+ ON/OFF
68	PC 1	O	OUT SEL	AV output select
69	PC 2	O	TUNER SEL	TUNER select
70	PC 3	O	RGB CTRL	RGB control
71	Vss	–	Vss	GND
72	XTAL	O	XTAL	Clock output
73				
74	EXTAL	I	EXTAL	Clock input (4.194304 MHz)
75	VREF	I	VREF	Reference voltage for resetting circuit (to VDD)
76	VFDP	I	VFDP	Power supply for FIP
77	PH 0	O	AV CTRL	AV control
78	PH 1	O	POWER CTRL	POWER control signal
79	PH 2	O	MEM CLK	EEPROM clock signal
80	PH 3	O	MEM CS	EEPROM CS signal

● A/D PORT ALLOCATION

- The A/D ports are allocated as shown below.

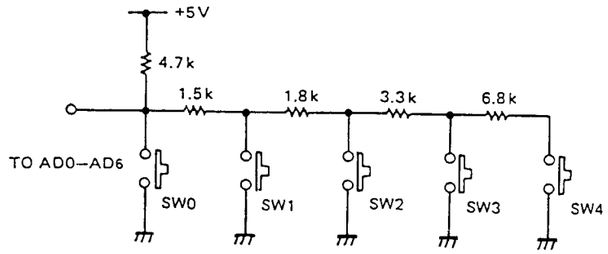

AD \ SW	PIN No.	SW0 0.00[V]	SW1 1.21[V]	SW2 2.06[V]	SW3 2.92[V]	SW4 3.70[V]
AD 0	35	RING 0	TEST 1	TEST 2 (× 120)		
AD 1	36	RING 1	CP		UB	VP
AD 2	37	RING 2	PAUSE	H.S. REWIND		
AD 3	38	TIMER REC	REC MODE	TV/VTR	VPS	A. INSERT
AD 4	39	REC	AUTO/MANUAL	TRACKING (+)	PROGRAM (+)	
AD 5	40	QUICK TIMER	INPUT SELECT	TRACKING (–)	PROGRAM (–)	EDIT
AD 6	41	STOP	PLAY	POWER	EJECT	

- KEY input signals pass through the A/D ports as shown above.
- Chattering-cancel time is 30 msec. KEY input is assumed when there are two input signals of the same voltage within 30 msec.
- Discriminate the model (SLV-325, 325VP, 325UB, 325EI or 325CP) by using the AD1 port. However, when discriminate SLV-325 or 325EI, set the switch to OFF position.

3-8. SYSTEM CONTROL — VIDEO BLOCK INTERFACE

Signal Name	Pin No.	I/O	STOP/ FF/REW	TAPE LOADING	TAPE UN-LOADING	PB	PB• PAUSE	SLOW	× 2	CUE	REVIEW	REC	REC• PAUSE	−×1	−×2
$\overline{V\,PB}$	MA-125 BOARD IC501 ⑱	O	H	H	H	L	L	L	L	L	L	H	H	L	L
HEAD SEL	MA-125 BOARD IC501 ⑲	O	L	L	L	L	H	*1	H	L	L	H	H	L	H
RF SW P	MA-125 BOARD IC501 ①	O	*2	*2	*2	*2	*2	*2	*2	*2	*2	*2	*2	*2	*2
Q VD	MA-125 BOARD IC501 ②	O	L	L	L	L	*4	*4	*4	*4	*4	L	L	*4	*4
EDIT	MA-125 BOARD IC501 ⑭	O	L	L	L	*5	*5	*5	*5	*5	*5	*5	L	*5	*5
AMS	MA-125 BOARD IC501 ㉑	O	L	L	L	L	L	*6	L	*7	*7	L	L	*7	*7
$\overline{SP}$/LP	MA-125 BOARD IC501 ⑪	O	*8	*8	*8	*9	*9	*9	*9	*9	*9	*8	*8	*9	*9
REC•$\overline{P}$	MA-125 BOARD IC501 ⑤	O	L	L	L	L	L	L	L	L	L	H	L	L	L
REC	MA-125 BOARD IC501 ⑲	O	L	L	L	L	L	L	L	L	L	H	H	L	L
V SYNC	MA-125 BOARD IC501 ⑯	I	*10	*10	*10	*10	*10	*10	*10	*10	*10	*10	*10	*10	*10

*1. "H" when the tape stops, and "L" when it runs (for approx. 40 msec).
*2. Synchronized with drum rotation. 25 Hz 50% duty pulse.
*4. V-cycle "H" pulse.
*5. Normally "L". "H" during EDIT mode.
*6. HI-Z when the tape runs reverse during SP mode "L" the other conditions.
*7. HI-Z (2.5V) during SP mode, or "L" during LP mode.
*8. By SP/LP selector, "L" during SP mode, or "H" during LP mode.
*9. By the mode on the recorded tape, "L" when it is SP mode, or "H" when "LP" mode.
*10. Vertical sync signal (positive polarity).

3-9. SYSTEM CONTROL — SERVO PERIPHERAL CIRCUIT INTERFACE

Signal Name	Pin No.	I/O	STOP	FF	REW	TAPE LOADING	TAPE UN-LOADING	PB	PB• PAUSE	SLOW	×2	CUE	REVIEW	REC	REC• PAUSE
RC IN *1	MA-125 BOARD IC501 ⑨	O	Hiz	Hiz	Hiz	Hiz	Hiz	Hiz	Hiz	Hiz	Hiz	Hiz	Hiz	*1	Hiz
CAP STOP	MA-125 BOARD IC501 ⑪	O	H	L	L	L	L	L	H	H	L	L	L	L	H
$\overline{\text{STEP PLS}}$	MA-125 BOARD IC501 ⑮	O	H	H	H	H	H	H	H	*2	H	H	H	H	H
CAP V *3	MA-125 BOARD IC501 ⑲	I													
SW POSITION *4	MA-125 BOARD IC501 ⑫	I													
$\overline{\text{PB CTL}}$	MA-125 BOARD IC501 ⑰	I	H	*6	*6			*1	H/L	*2	*6	*6	*6	*1	L
VD CTL	MA-125 BOARD IC501 ⑰	I	H	*6	*6			*1	H/L	*2	*6	*6	*6	*1	L
DRUM PG	MA-125 BOARD IC501 ⑱	I	L	L	L	*5	*5	*7	*7	*7	*7	*7	*7	*7	*7
DRUM FG	MA-125 BOARD IC501 ⑲	I	L	L	L	*5	*5	*8	*8	*8	*8	*8	*8	*8	*8
CAP FG	MA-125 BOARD IC501 ⑳	I	H/L	*6	*6	*5	*5	*6	H/L	*9	*6	*6	*6	*6	H/L
CAP RVS	MA-125 BOARD IC501 ⑫	O	H	L	H	L	H	L	L	*2	L	L	H	L	L
CAP DA *14	MA-125 BOARD IC501 ⑬	O	*11	L	L	*11	*11	12	*11	*11	*12	*12	*12	*12	*11
DRUM DA *14	MA-125 BOARD IC501 ⑭	O	*13	*13	*13	*13	*13	*13	*13	*13	*13	*13	*13	*13	*13
REC•$\overline{\text{P}}$	MA-125 BOARD IC501 ⑤	O	L	L	L	L	L	L	L	L	L	L	L	H	L
STEP	MA-125 BOARD IC501 ㉔	O	L	L	L	L	L	L	L	*15	L	L	L	L	L

*1. 25 Hz pulse. (Modified Rec CTL)
*2. "L" pulse when the tape runs.
*3. Input terminal for capstan constant-voltage drive.
Used in the FF/REW mode and for cassette loading/unloading.
*4. Input terminal for switching position adjustment.
*5. Indefinite cycle pulse.
*6. Cycle pulse proportional to a tape speed.
*7. 25 Hz "H" pulse.

*8. 150 Hz pulse.
*9. Tape run time pulse.
*10. V-cycle "L" pulse.
*11. "H" or "L" pulse in a cycle of approx. 2 msec.
*12. "H" or "L" pulse in a cycle of approx. 1.5 msec.
*13. "H" or "L" pulse in a cycle of approx. 3 msec.
*14. 3-value output of "H", "L" and HI-Z (2.5V).
*15. "H" pulse when the tape runs.

3-10. SYSTEM CONTROL — MECHANISM BLOCK INTERFACE

Signal Name	Pin No.	I/O	HI-SPEED REW	EJECTED	CASSETTE LOADING	CASSETTE UN-LOADING	TAPE LOADING	TAPE UN-LOADING	STOP	FF	REW	PB	PB• PAUSE	SLOW	×2	CUE	REVIEW	REC	REC PAUSE
CAM *1	MA-125 BOARD IC501 ⑪	O	L	L	L	L	H	H	L	L	L	L	L	L	L	L	L	L	L
LOAD	MA-125 BOARD IC501 ⑬	O	L	L	H	H	L	L	L	L	L	L	L	L	L	L	L	L	L
CW/$\overline{CCW}$	MA-125 BOARD IC501 ⑫	O			H	L	H	L											
MODE 1	MA-125 BOARD IC501 ㊽	I	H	L	L	L	H	H	L	H	H	H	L	L	H	H	H	H	H
MODE 2	MA-125 BOARD IC501 ㊼	I	L	H	H	H	H	H	L	L	L	L	H	H	L	L	L	L	H
MODE 3	MA-125 BOARD IC501 ㊻	I	H	H	H	H	L	L	L	L	L	H	H	H	H	H	L	H	H
MODE 4	MA-125 BOARD IC501 ㊺	I	H	H	H	H	H	H	L	H	H	L	L	L	L	L	L	L	L
REC PRF	MA-125 BOARD IC501 ⑰	I	*2	L	*2	*2	*2	*2	*2	*2	*2	*2	*2	*2	*2	*2	*2	*2	*2
C-UP/$\overline{DOWN}$	MA-125 BOARD IC501 ⑱	I	L	H	H→L	H→L	L	L	L	L	L	L	L	L	L	L	L	L	L
T REEL	MA-125 BOARD IC501 ㊹	I	*3	H/L	H/L	H/L	H/L	H/L	H/L	*3	*3	*3	H/L	*3	*3	*3	*3	*3	H/L
S REEL	MA-125 BOARD IC501 ㊸	I	*3	H/L	H/L	H/L	*3	*3	H/L	*3	*3	*3	H/L	*3	*3	*3	*3	*3	H/L
END LED	MA-125 BOARD IC501 ㊺	O	*4	*4	*4	*4	*4	*4	*4	*4	*4	*4	*4	*4	*4	*4	*4	*4	*4
CAP V	MA-125 BOARD IC501 ㊾	I	*6	*6	*6	*6	*6	*6	*6	*6	*6	*6	*6	*6	*6	*6	*6	*6	*6
CAP STOP	MA-125 BOARD IC501 ⑪	O	L	H			L	L	H	L	L	L	H	H	L	L	L	L	H
CAP RVS	MA-125 BOARD IC501 ⑫	O	H	H			L	H	H/L	L	H	L	L	L	L	L	H	L	L
CAP DA *8	MA-125 BOARD IC501 ⑬	O																	
T SENS	MA-125 BOARD IC501 ㉑	I	*7	*4	*4	*4	*7	*7	*7	*7	*7	*7	*7	*7	*7	*7	*7	*7	*7
S SENS	MA-125 BOARD IC501 ㉒	I	*7	*4	*4	*4	*7	*7	*7	*7	*7	*7	*7	*7	*7	*7	*7	*7	*7

*1. "H" when progressing to the MECHA mode.
*2. "L" when a cassette erasure preventive finger is bent, and "H" when not bent.
*3. Cycle pulse proportional to a reel speed.
*4. "H" pulse in a cycle of approx. 2 msec.
*6. Input terminal for capstan constant-voltage drive.
Used in the FF/REW mode and for cassette loading/unloading.
*7. Normally "L", "H" pulse in a cycle of 2 msec. when tape top or tape end is detected.
*8. 3-value output of "H", "L" and HI-Z (2.5V).

3-11. SYSTEM CONTROL — SYSTEM CONTROL PERIPHERAL CIRCUIT INTERFACE

Signal Name	Pin No.	I/O	I/O LEVEL
$\overline{\text{COSMO RESET}}$	MA-125 BOARD IC501 ㊵	I	Normally "H". Set to "L" when a power failure is delected or power is restored.
$\overline{\text{COSMO CS}}$	MA-125 BOARD IC501 ㊹	I	Chip select signal from the timer microcomputer (MF-151 board IC001). V-cycle "L" pulse.
SI BUS	MA-125 BOARD IC501 ㊺	I	Serial communication data from the timer microcomputer. V-cycle "L" pulse.
SO BUS	MA-125 BOARD IC501 ㊻	O	Serial communication data to the timer microcomputer. V-cycle "L" pulse.
$\overline{\text{S CLK}}$	MA-125 BOARD IC501 ㊼	O	Serial communication clock to the timer microcomputer. V-cycle "L" pulse.

3-12. SYSTEM CONTROL — AUDIO BLOCK INTERFACE

Signal Name	Pin No.	I/O	STOP/ FF/REW	TAPE LOADING	TAPE UN-LOADING	PB	PB• PAUSE	SLOW	×2	CUE	REVIEW	REC	REC PAUSE	−×1	−×2
NA•PB	MA-125 BOARD IC501 ㊺	O	L	L	L	H	H	H	H	H	H	L	L	H	H
A MUTE	MA-125 BOARD IC501 ㊽	O	L	L	L	*1	H	H	H	H	H	L	L	H	H
$\overline{\text{SP}}$/LP	MA-125 BOARD IC501 ㊶	O	*2	*2	*2	*3	*3	*3	*3	*3	*3	*2	*2	*3	*3
REC•$\overline{\text{P}}$	MA-125 BOARD IC501 ⑤	O	L	L	L	L	L	L	L	L	L	H	L	L	L

*1. "H" when CTL signal is not played back.
*2. By SP/LP selector, "L" during SP mode, or "H" during LP mode.
*3. By the mode on the recorded tape, "L" when it is SP mode, or "H" when "LP" mode.

3-13. TIMER, MODE CONTROL BLOCK DIAGRAM

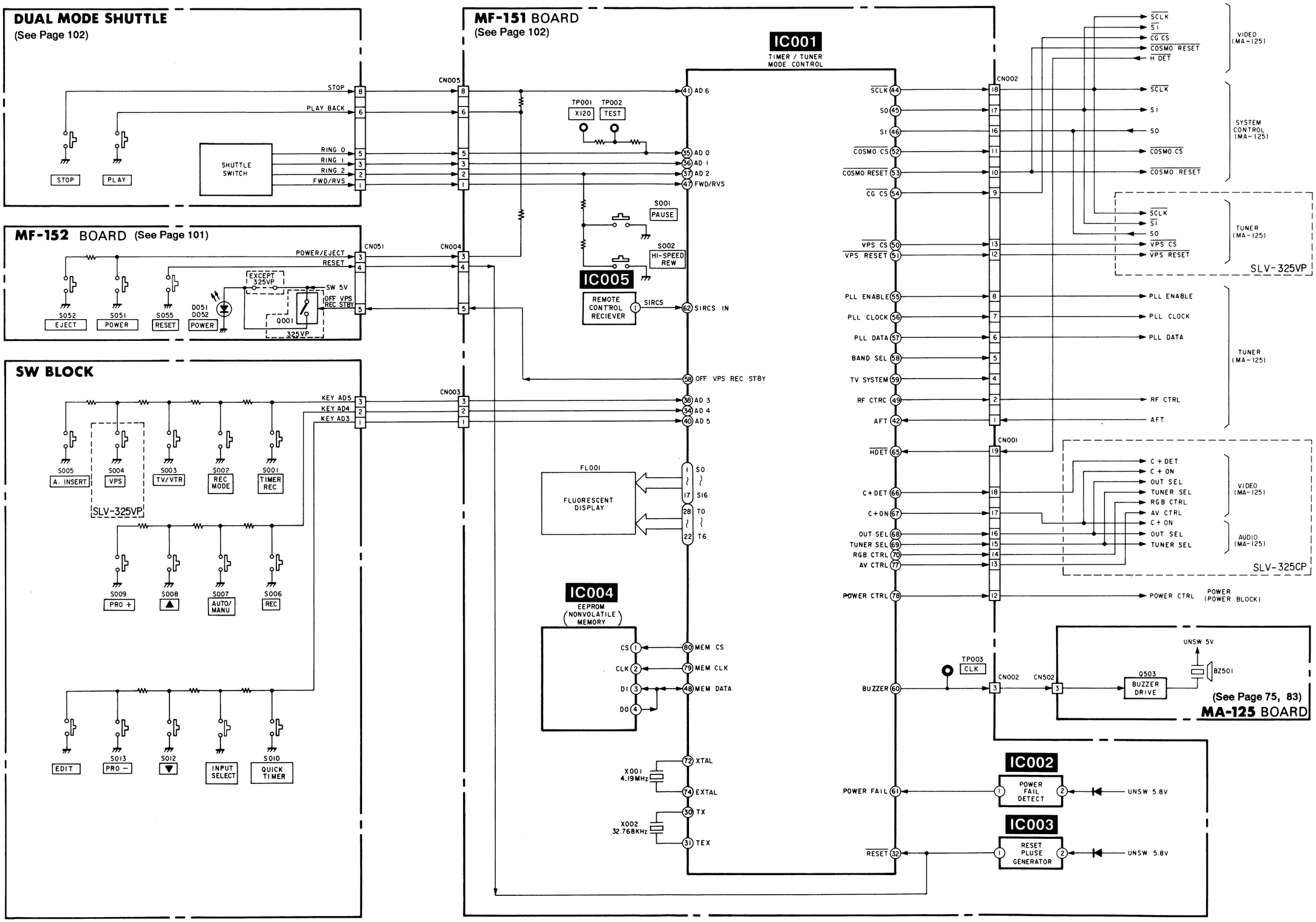

3-14. AUDIO BLOCK DIAGRAM

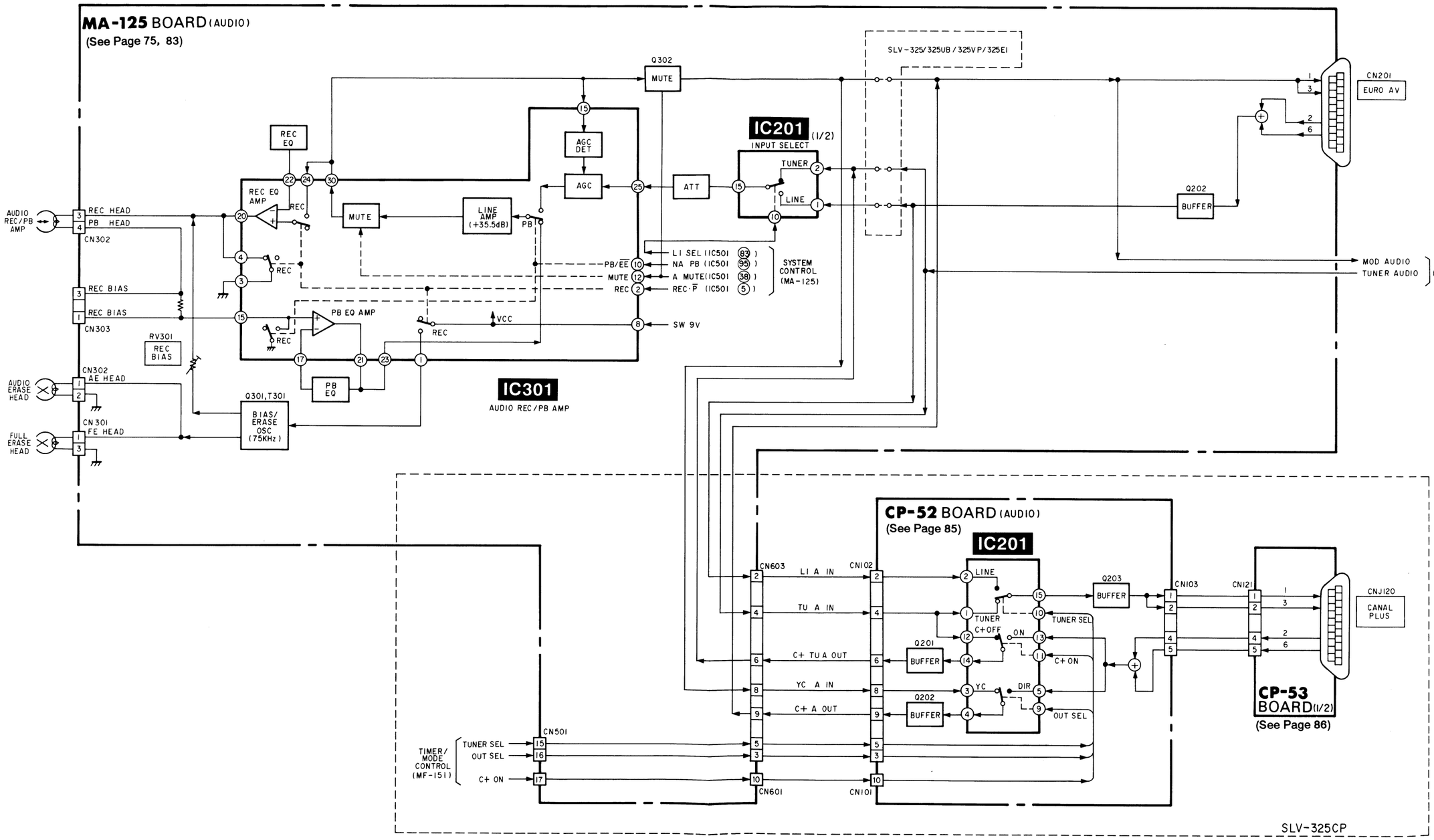

3-15. TUNER BLOCK DIAGRAM

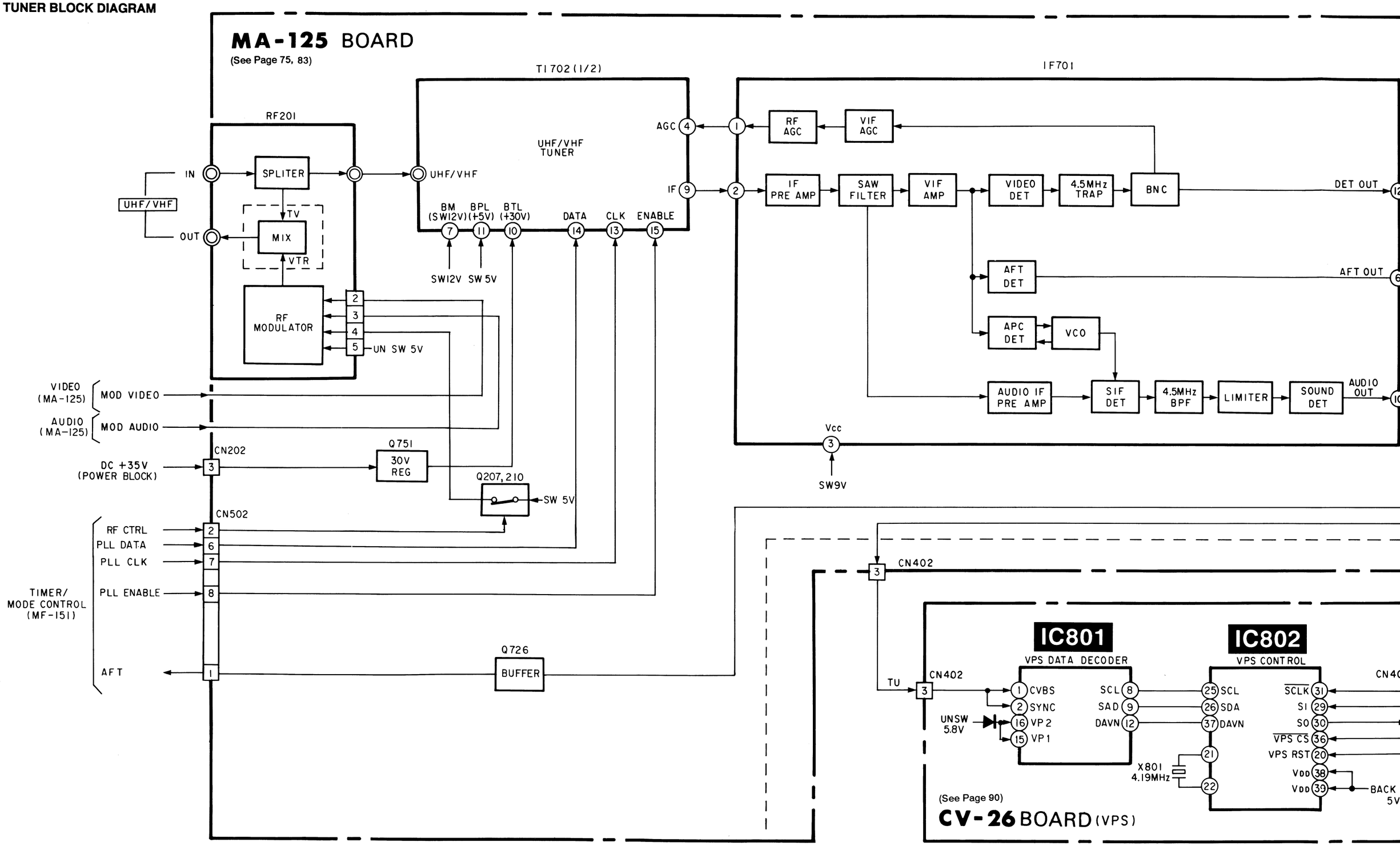

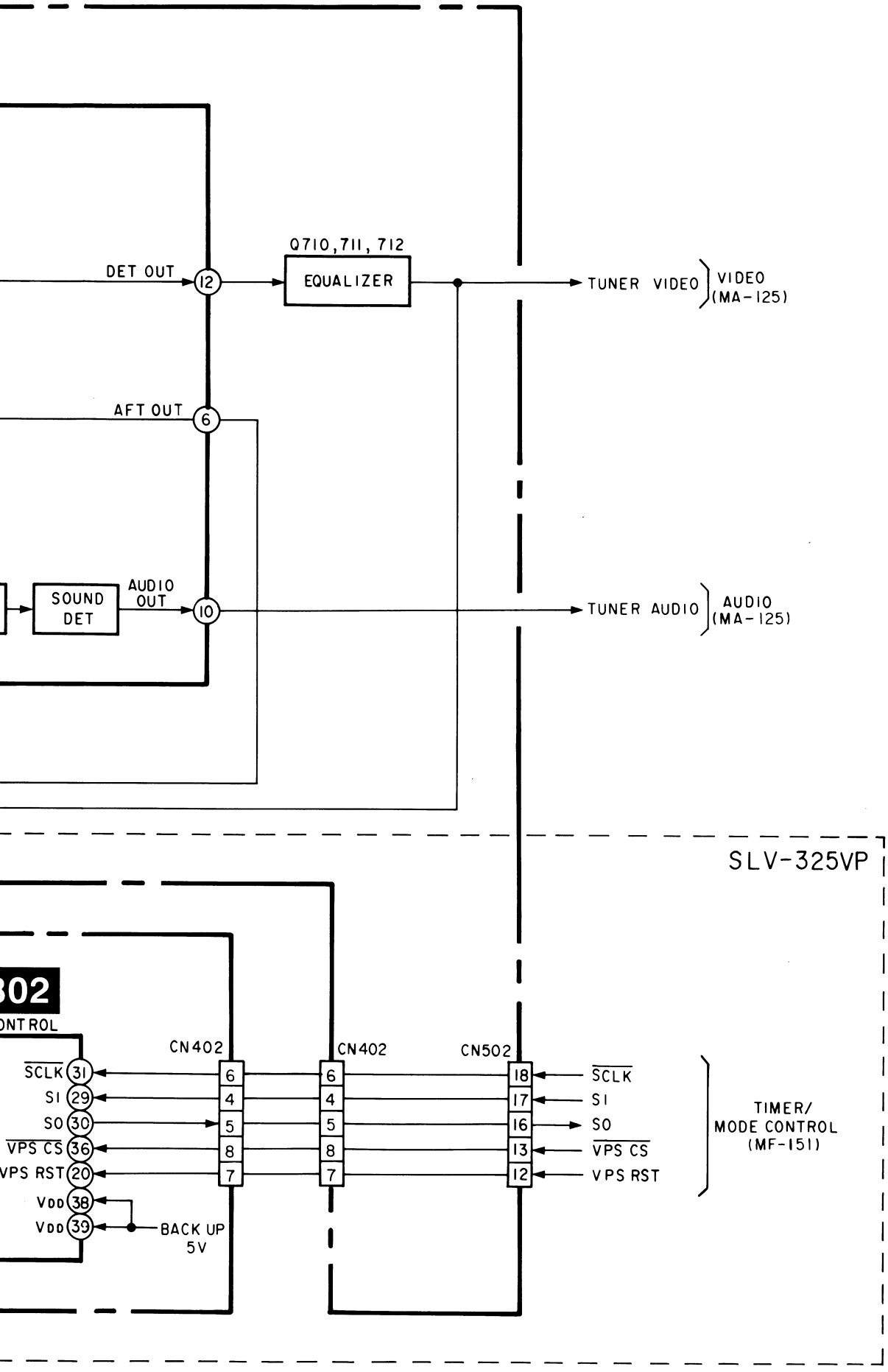
Q710, 711, 712
EQUALIZER
DET OUT
12
TUNER VIDEO
VIDEO
(MA-125)
AFT OUT
6
SOUND
DET
AUDIO
OUT
10
TUNER AUDIO
AUDIO
(MA-125)
SLV-325VP
302
ONTROL
CN402
CN402
CN502
SCLK 31
SI 29
SO 30
VPS CS 36
VPS RST 20
VDD 38
VDD 39
BACK UP
5V
6
4
5
8
7
18
17
16
13
12
SCLK
SI
SO
VPS CS
VPS RST
TIMER/
MODE CONTROL
(MF-151)

3-16. POWER BLOCK DIAGRAM

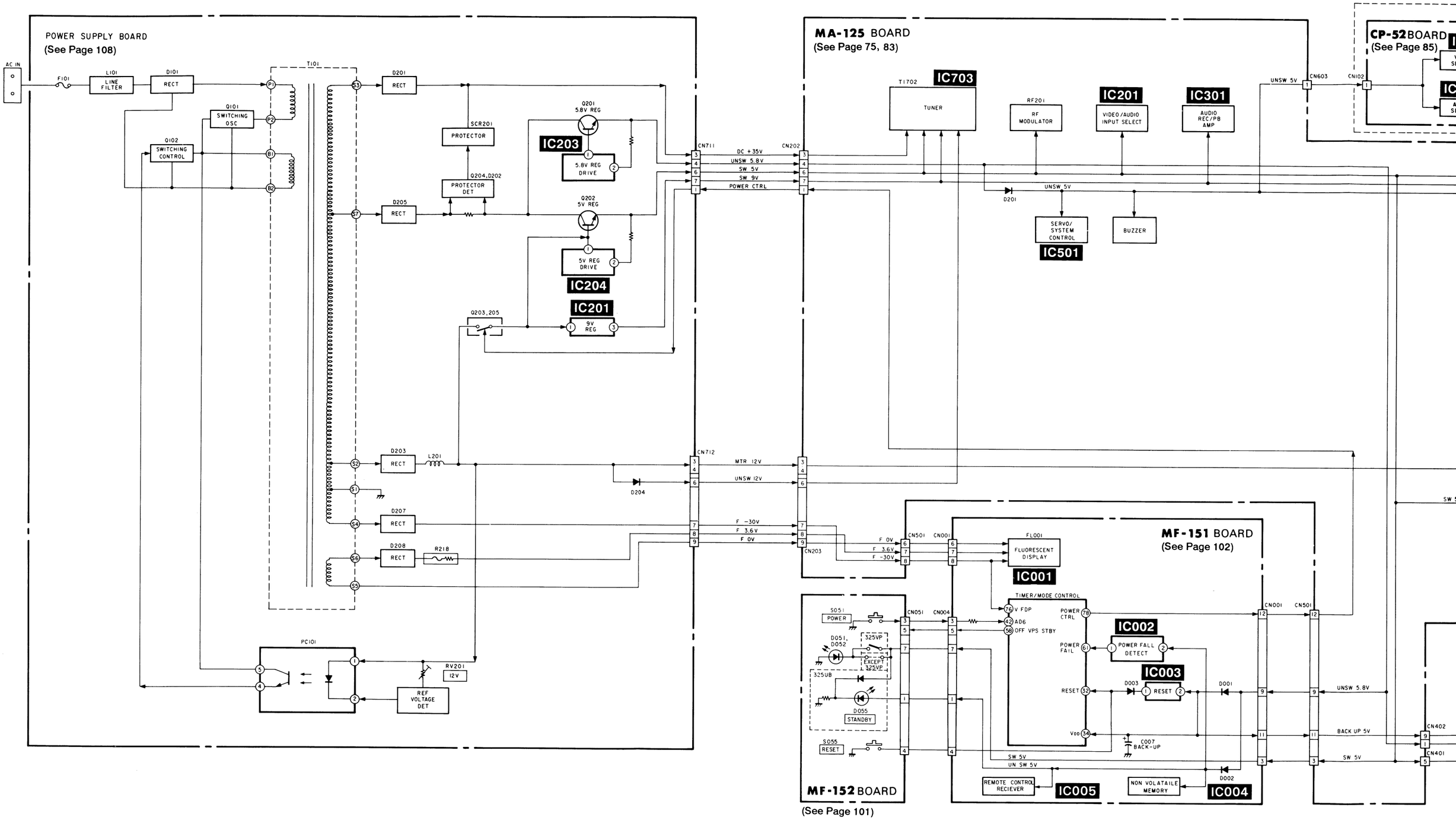

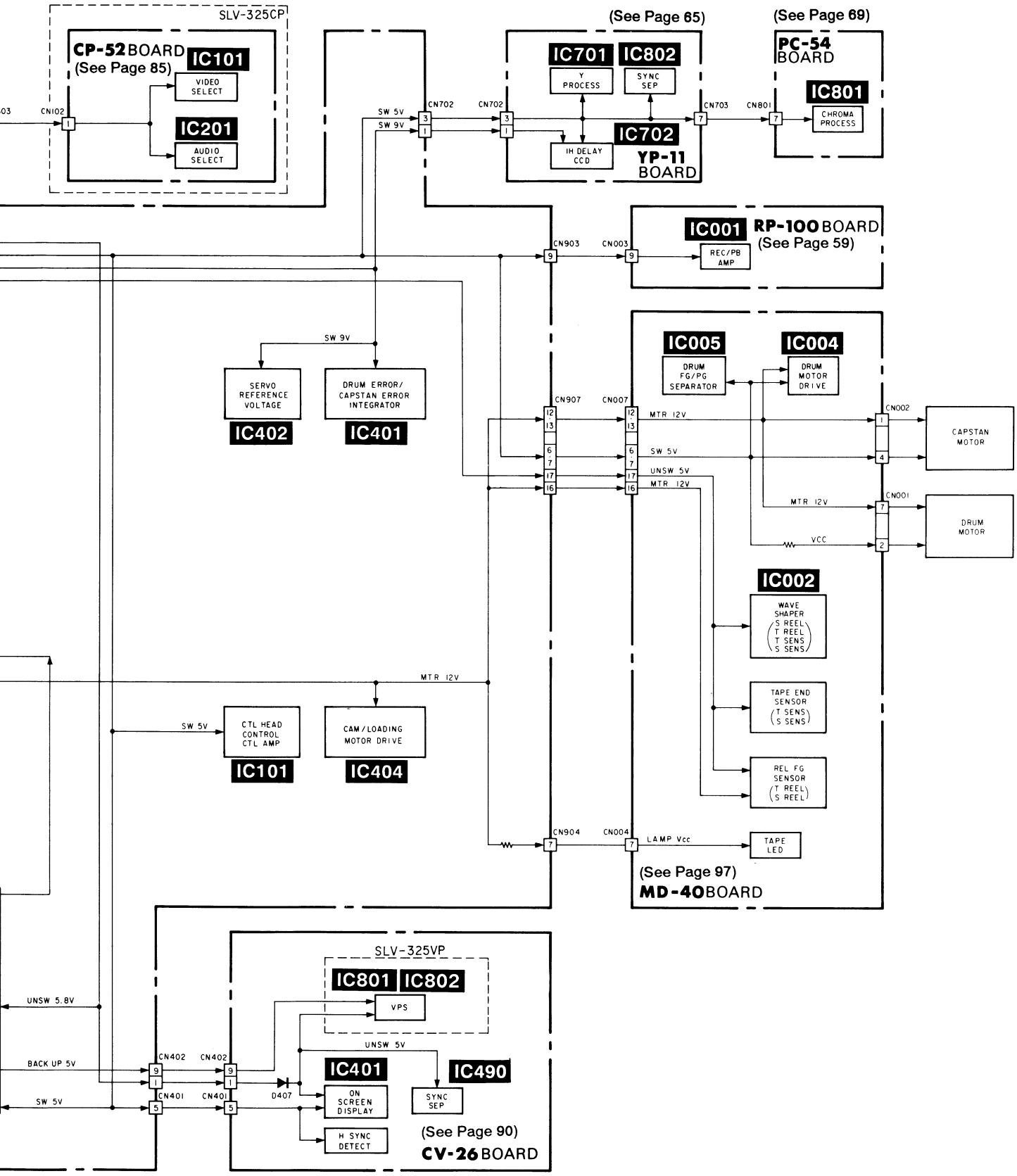
SLV-325CP
CP-52 BOARD
(See Page 85)
IC101
VIDEO SELECT
IC201
AUDIO SELECT
CN102
SW 5V
SW 9V
CN702
(See Page 65)
IC701
Y PROCESS
IC802
SYNC SEP
IC702
IH DELAY CCD
YP-11 BOARD
CN703
(See Page 69)
PC-54 BOARD
IC801
CHROMA PROCESS
CN801
IC001
RP-100 BOARD
(See Page 59)
REC/PB AMP
CN903
CN003
SW 9V
SERVO REFERENCE VOLTAGE
IC402
DRUM ERROR/ CAPSTAN ERROR INTEGRATOR
IC401
IC005
DRUM FG/PG SEPARATOR
IC004
DRUM MOTOR DRIVE
CN907
CN007
MTR 12V
SW 5V
UNSW 5V
MTR 12V
CN002
CAPSTAN MOTOR
MTR 12V
VCC
CN001
DRUM MOTOR
IC002
WAVE SHAPER
(S REEL
T REEL
T SENS
S SENS)
TAPE END SENSOR
(T SENS
S SENS)
REL FG SENSOR
(T REEL
S REEL)
MTR 12V
SW 5V
CTL HEAD CONTROL CTL AMP
IC101
CAM/LOADING MOTOR DRIVE
IC404
CN904
CN004
LAMP Vcc
TAPE LED
(See Page 97)
MD-40 BOARD
SLV-325VP
IC801 IC802
VPS
UNSW 5.8V
UNSW 5V
BACK UP 5V
SW 5V
CN402
CN401
D407
IC401
ON SCREEN DISPLAY
H SYNC DETECT
IC490
SYNC SEP
(See Page 90)
CV-26 BOARD

4-1. FRAME SCHEMATIC DIAGRAM

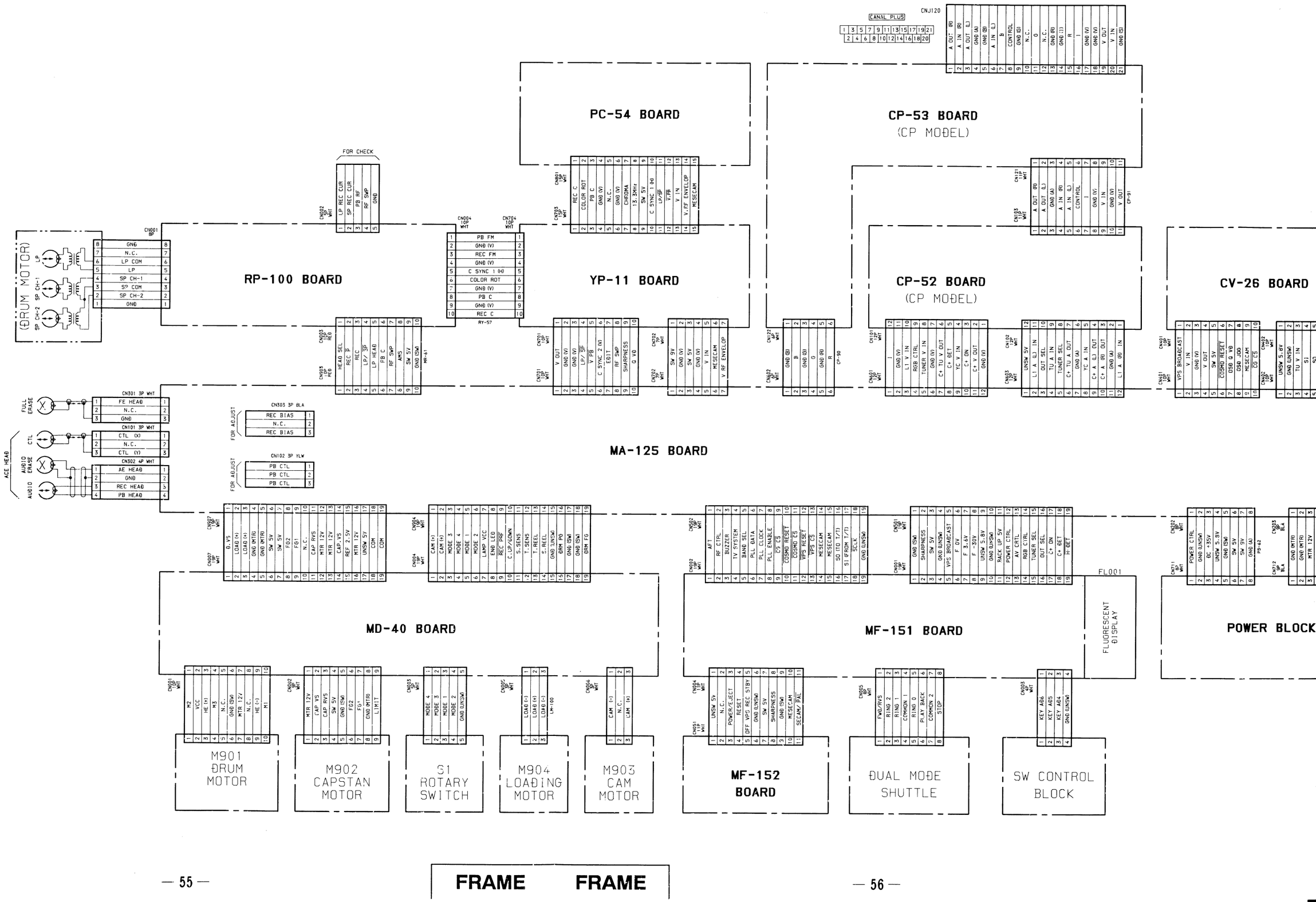

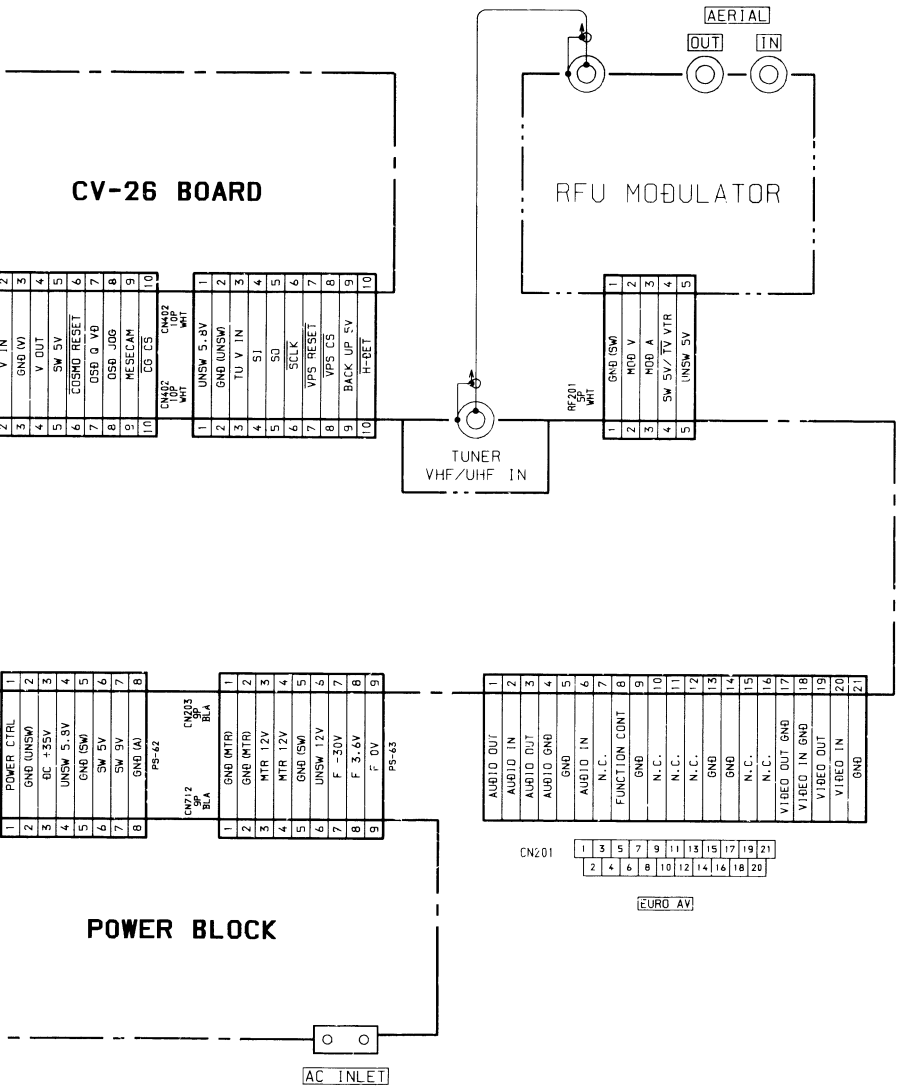
AERIAL
OUT
IN
CV-26 BOARD
RFU MODULATOR
TUNER
VHF/UHF IN
POWER BLOCK
AC INLET
EURO AV
CN201

4-2. PRINTED WIRING BOARDS AND SCHEMATIC DIAGRAMS

THIS NOTE IS COMMON FOR PRINTED WIRING BOARDS AND SCHEMATIC DIAGRAMS.
(In addition to this , the necessary note is printed in each block.)

- **For printed wiring boards.**
- ○— : indicated a lead wire mounted on the component side.
- —— : indicated a lead wire mounted on the conductor side.
- ■ : Parts mounted on the conductor side.
- ▒ : Pattern from the side which enables seeing.
- Circled numbers refer to waveforms.

- **For schematic diagrams.**
- All resistors are in ohms, 1/4W unless otherwise noted. kΩ : 1000Ω , MΩ : 1000kΩ .
- All capacitors are in μF unless otherwise noted. pF: μμF. 50V or less are not indicated except for electrolytics and tantalums.
- All variable and adjustable resistors have characteristic curve B, unless otherwise noted.
- : nonflammable resistor.
- : fusible resistor.
- : panel designation.
- : adjustment for repeair.
- : B+ Line.
- : B– Line.
- : IN/OUT direction of (+, –) B LINE.
- Circled numbers refer to waveforms.
- Voltages are dc between ground and measurement points.
- Readings are taken with a color-bar signal input.
- Readings are taken with a digital multimeter (DC10MΩ).
- Voltage variations may be noted due to normal production tolerances.

Note: The components identified by mark ⚠ or dotted line with mark ⚠ are critical for safty. Replace only with part number specified.

When indicating parts by reference number, please include the board name.

RP-100 BOARD

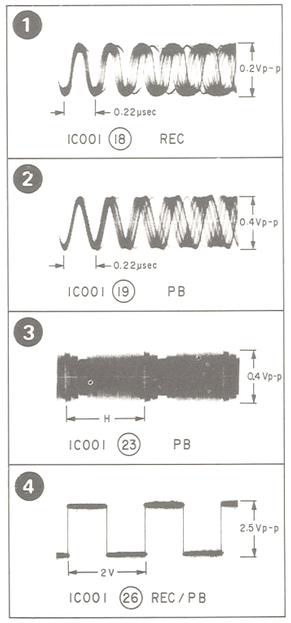

RP-100 (VIDEO REC/PB AMP) SCHEMATIC DIAGRAM

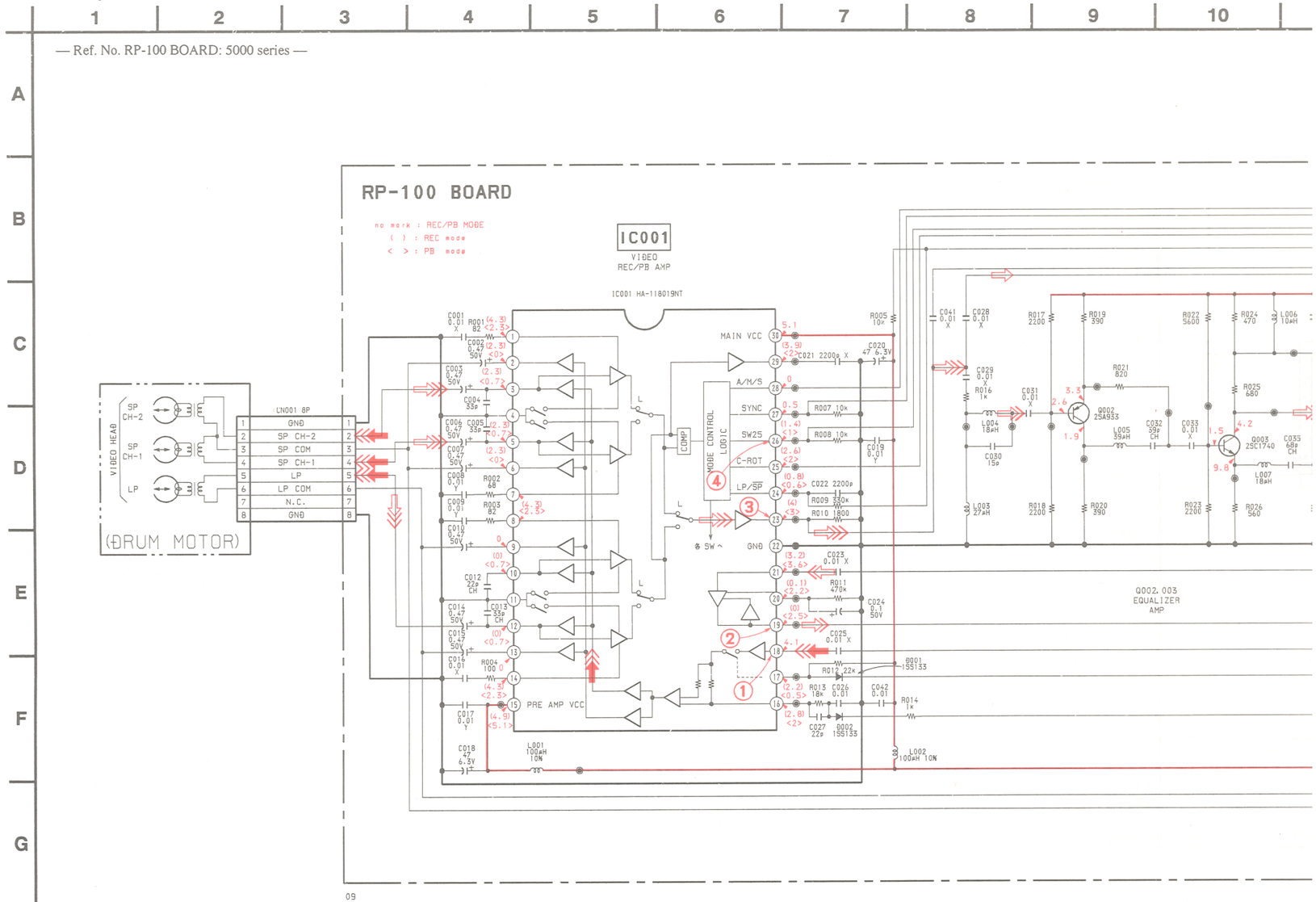

- **SIGNAL PATH**

	VIDEO SIGNAL			AUDIO SIGNAL
	CHROMA	Y	Y/CHROMA	
REC	➡	➡	➡	
PB	⇨	⇨	⇨	

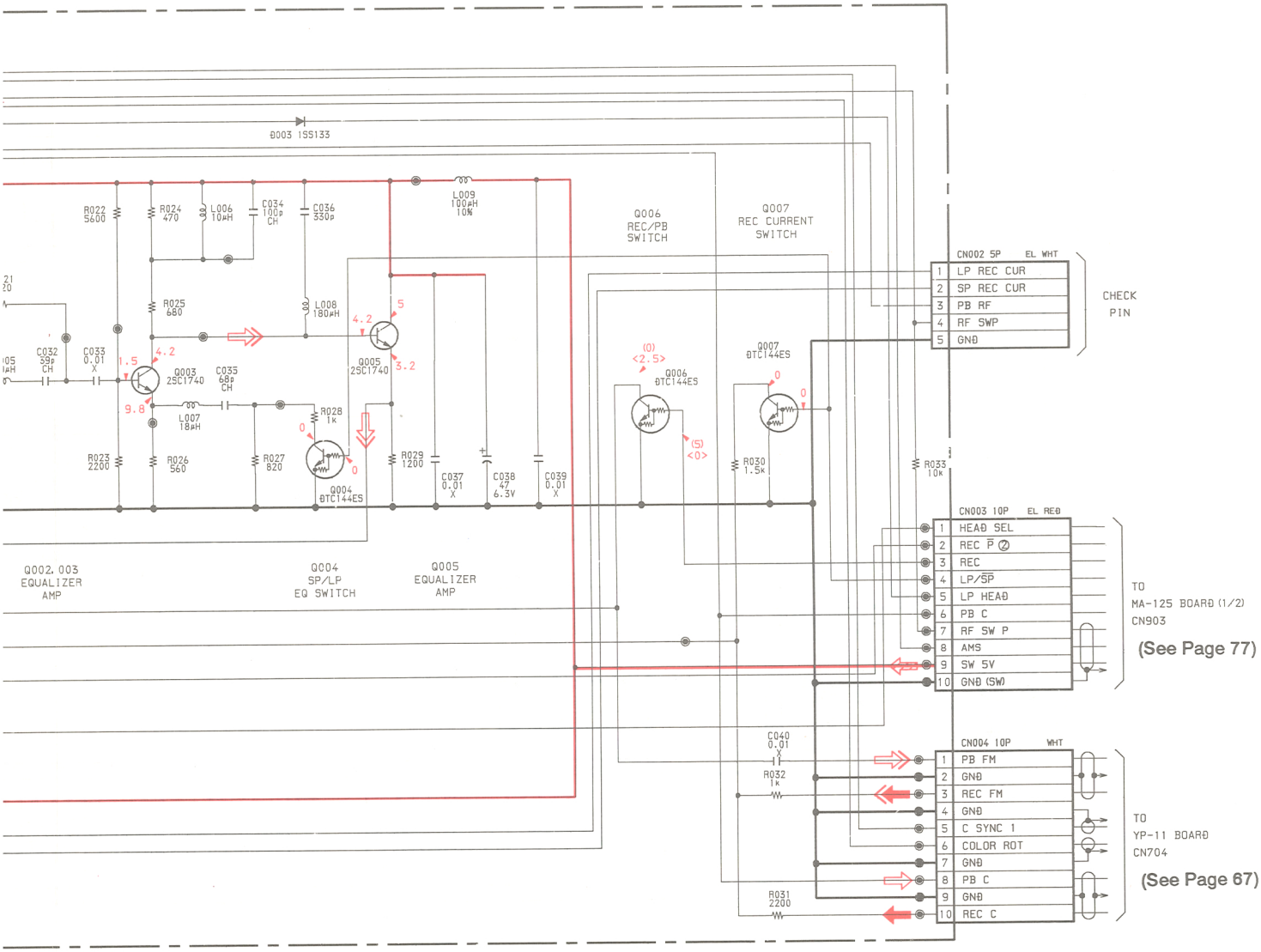
D003 1SS133
R022 5600
R024 470
L006 10μH
C034 100p CH
C036 330p
L009 100μH 10%
R025 680
L008 180μH
C032 39p CH
C033 0.01 X
Q003 2SC1740
C035 68p CH
L007 18μH
R028 1k
R023 2200
R026 560
R027 820
Q004 DTC144ES
R029 1200
C037 0.01 X
C038 47 6.3V
C039 0.01 X
Q006 REC/PB SWITCH
Q007 REC CURRENT SWITCH
Q005 2SC1740
Q006 DTC144ES
Q007 DTC144ES
R030 1.5k
R033 10k
Q002, 003 EQUALIZER AMP
Q004 SP/LP EQ SWITCH
Q005 EQUALIZER AMP
CN002 5P EL WHT
1 LP REC CUR
2 SP REC CUR
3 PB RF
4 RF SWP
5 GND
CHECK PIN
CN003 10P EL RED
1 HEAD SEL
2 REC P
3 REC
4 LP/SP
5 LP HEAD
6 PB C
7 RF SW P
8 AMS
9 SW 5V
10 GND (SW)
TO MA-125 BOARD (1/2) CN903
(See Page 77)
C040 0.01 X
R032 1k
R031 2200
CN004 10P WHT
1 PB FM
2 GND
3 REC FM
4 GND
5 C SYNC 1
6 COLOR ROT
7 GND
8 PB C
9 GND
10 REC C
TO YP-11 BOARD CN704
(See Page 67)

RP-100 (VIDEO REC/PB AMP) PRINTED WIRING BOARD

— Ref. No. RP-100 BOARD: 5000 series —

- For printed wiring boards
- ● : Through hole.
- ▭ : Pattern of the rear side.

RP-100 BOARD

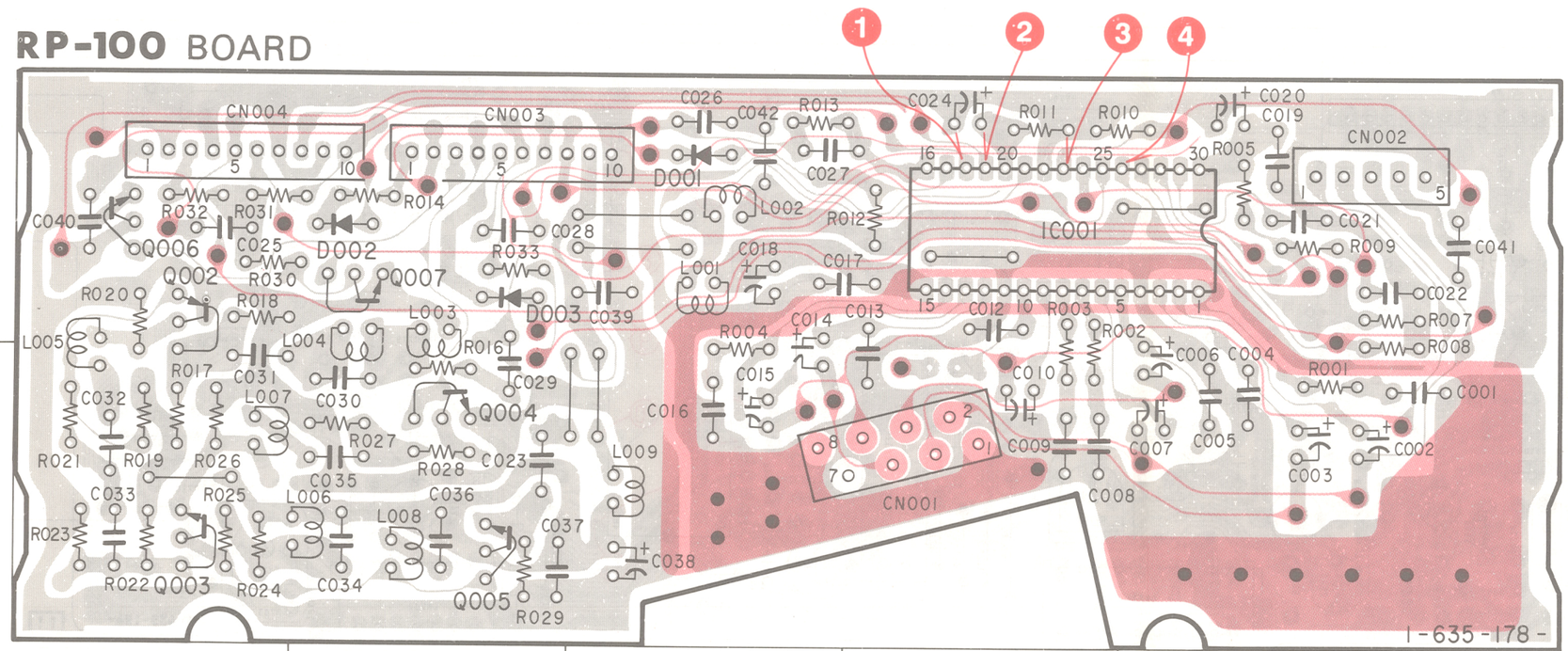

RP-100 BOARD

D001	A-3
D002	A-2
D003	A-2
IC001	A-4
Q002	A-1
Q003	B-1
Q004	B-2
Q005	B-2
Q006	A-1
Q007	A-2

〈 DIODE 〉

D001	8-719-911-19	DIODE	1SS119
D002	8-719-911-19	DIODE	1SS119
D003	8-719-911-19	DIODE	1SS119

〈 IC 〉

IC001	8-759-320-52	IC	HA118019NT

〈 TRANSISTOR 〉

Q002	8-729-119-76	TRANSISTOR	2SA1175-HFE
Q003	8-729-119-78	TRANSISTOR	2SC2785-HFE
Q004	8-729-900-89	TRANSISTOR	DTC144ES
Q005	8-729-119-78	TRANSISTOR	2SC2785-HFE
Q006	8-729-900-89	TRANSISTOR	DTC144ES
Q007	8-729-900-89	TRANSISTOR	DTC144ES

YP-11 (Y PROCESS) PRINTED WIRING BOARD

— Ref. No. YP-11 BOARD: 6000 series —

YP-11 BOARD

D701 B-4
D705 B-8

IC701 B-6
IC702 A-3
IC802 C-2

Q702 B-4
Q704 A-8
Q705 B-3
Q706 B-3
Q711 A-3
Q721 B-2
Q722 B-8
Q723 B-8
Q810 B-2
Q883 C-2

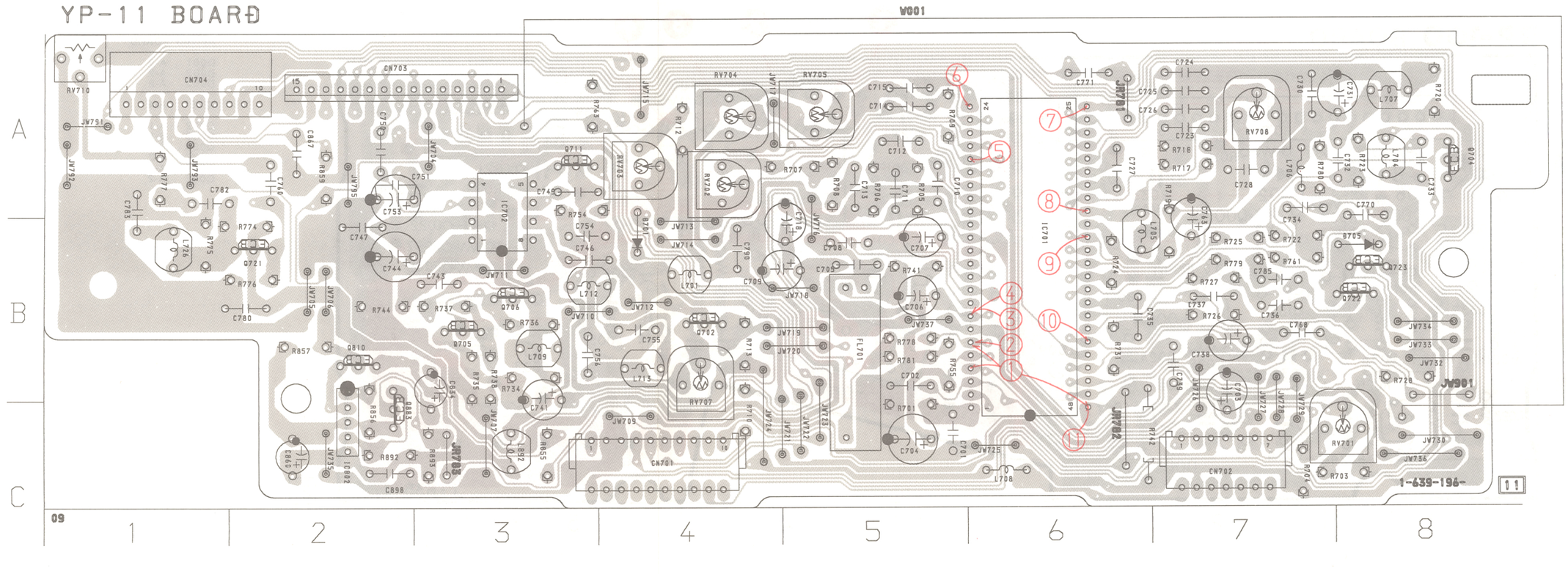

〈 DIODE 〉

D701 8-719-911-19 DIODE 1SS119
D705 8-719-911-19 DIODE 1SS119

〈 IC 〉

IC701 8-759-420-07 IC AN3231K
IC702 8-752-321-89 IC CXL5003P
IC802 8-759-822-05 IC LA7213

〈 TRANSISTOR 〉

Q702 8-729-119-76 TRANSISTOR 2SA1175-HFE
Q704 8-729-900-89 TRANSISTOR DTC144ES
Q705 8-729-119-78 TRANSISTOR 2SC2785-HFE
Q706 8-729-119-76 TRANSISTOR 2SA1175-HFE
Q711 8-729-119-76 TRANSISTOR 2SA1175-HFE

Q721 8-729-119-78 TRANSISTOR 2SC2785-HFE
Q722 8-729-900-89 TRANSISTOR DTC144ES
Q723 8-729-900-89 TRANSISTOR DTC144ES
Q810 8-729-900-65 TRANSISTOR DTA144ES
Q883 8-729-119-78 TRANSISTOR 2SC2785-HFE

— Ref. No. YP-11 BOARD: 6000 series —

YP-11 BOARD

no mark:REC/PB mode
( ):REC mode
< >:PB mode

IC701 Y PROCESS

IC802 SYNC SEP

IC702 1H DELAY

Q705, 706 CCD DRIVE

Q702, 711 BUFFER

Q721 Y-FM BUFFER

Q810 BUFFER

Q883 BUFFER

CN701 10P WHT

V.OUT	1
GND (V)	2
GND (V)	3
LP/SP	4
V.PB	5
C SYNC 2 (V)	6
EDIT	7
RF SWP	8
SHARPNESS	9
Q.V0	10

TO MA-125 BOARD (1/2) CN701

(See Page 76)

CN702 7P WHT

SW 9V	1
GND (V)	2
SW 5V	3
GND (V)	4
V.IN	5
ME SECAM	6
V.RF ENVELOP	7

TO MA-125 BOARD (1/2) CN702

(See Page 77)

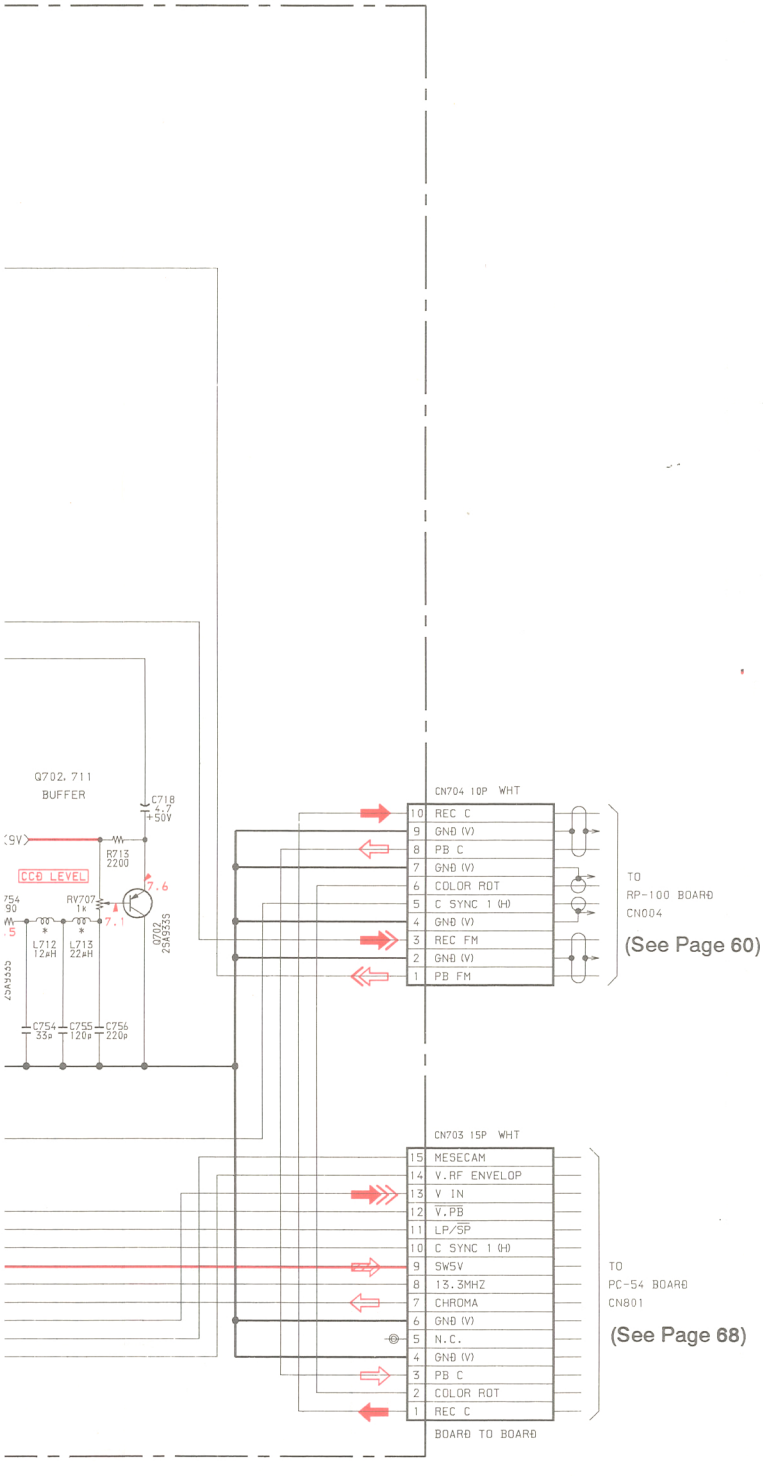

YP-11 BOARD

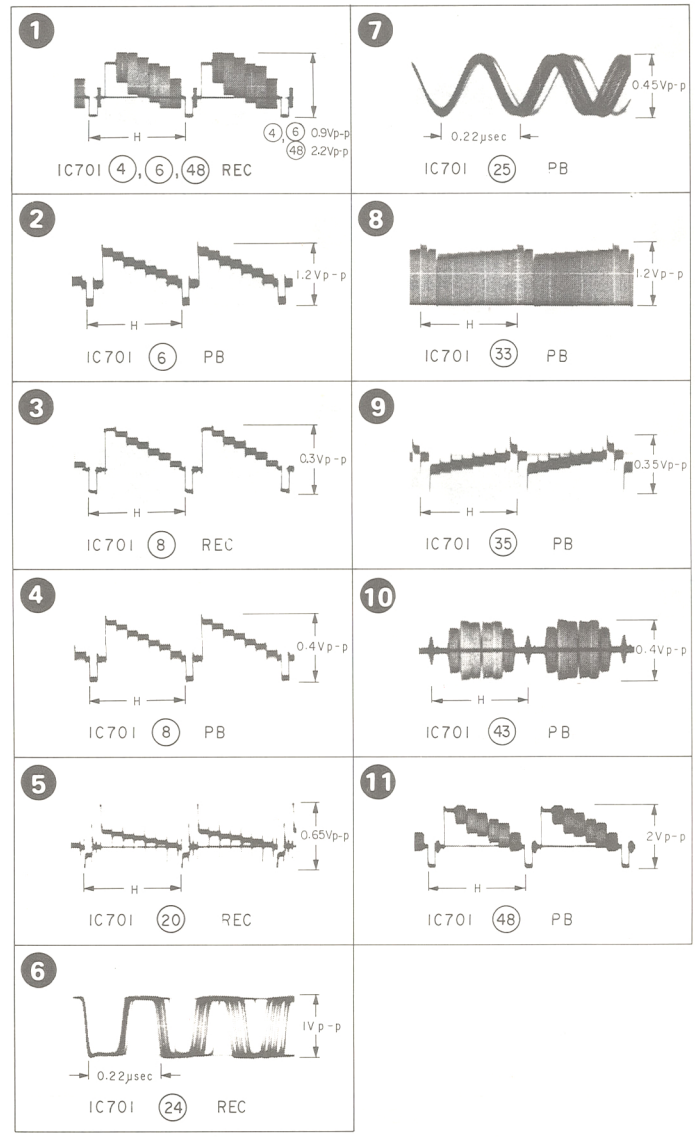

- **SIGNAL PATH**

	VIDEO SIGNAL			AUDIO SIGNAL
	CHROMA	Y	Y/CHROMA	
REC	➡	➡	➡	
PB	⇨	⇨	⇨	

PC-54 BOARD

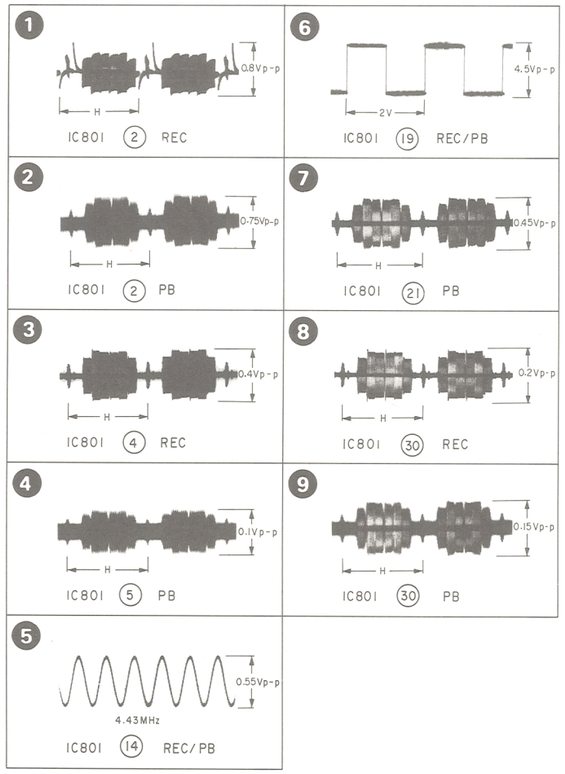

- **SIGNAL PATH**

	VIDEO SIGNAL			AUDIO SIGNAL
	CHROMA	Y	Y/CHROMA	
REC	➡	➡	➡	
PB	⇨			

PC-54 (CHROMA PROCESS) SCHEMATIC DIAGRAM

1 2 3 4 5 6 7 8 9 10 11 12

A B C D E F G H I J

— Ref. No. PC-54 BOARD: 7000 series —

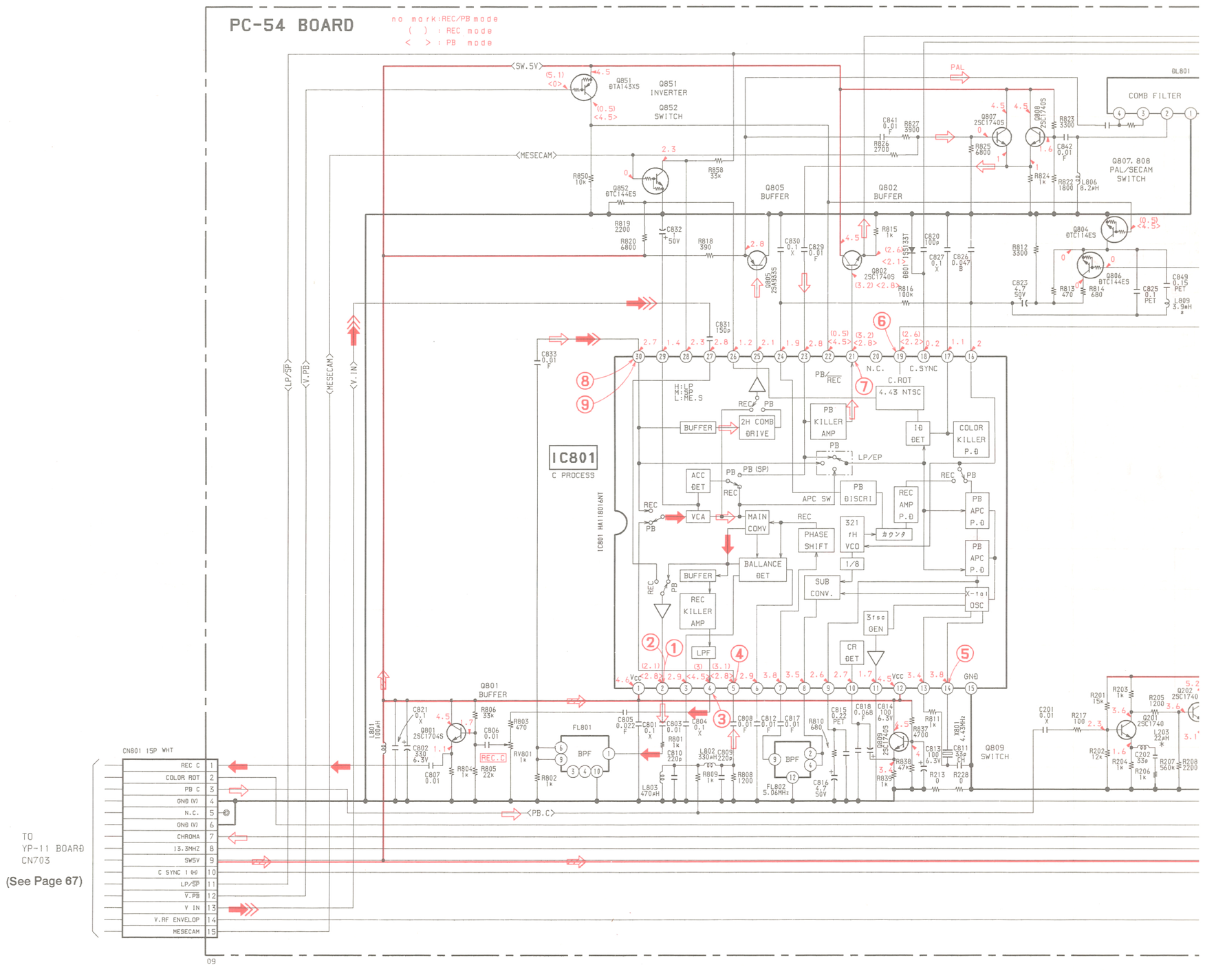

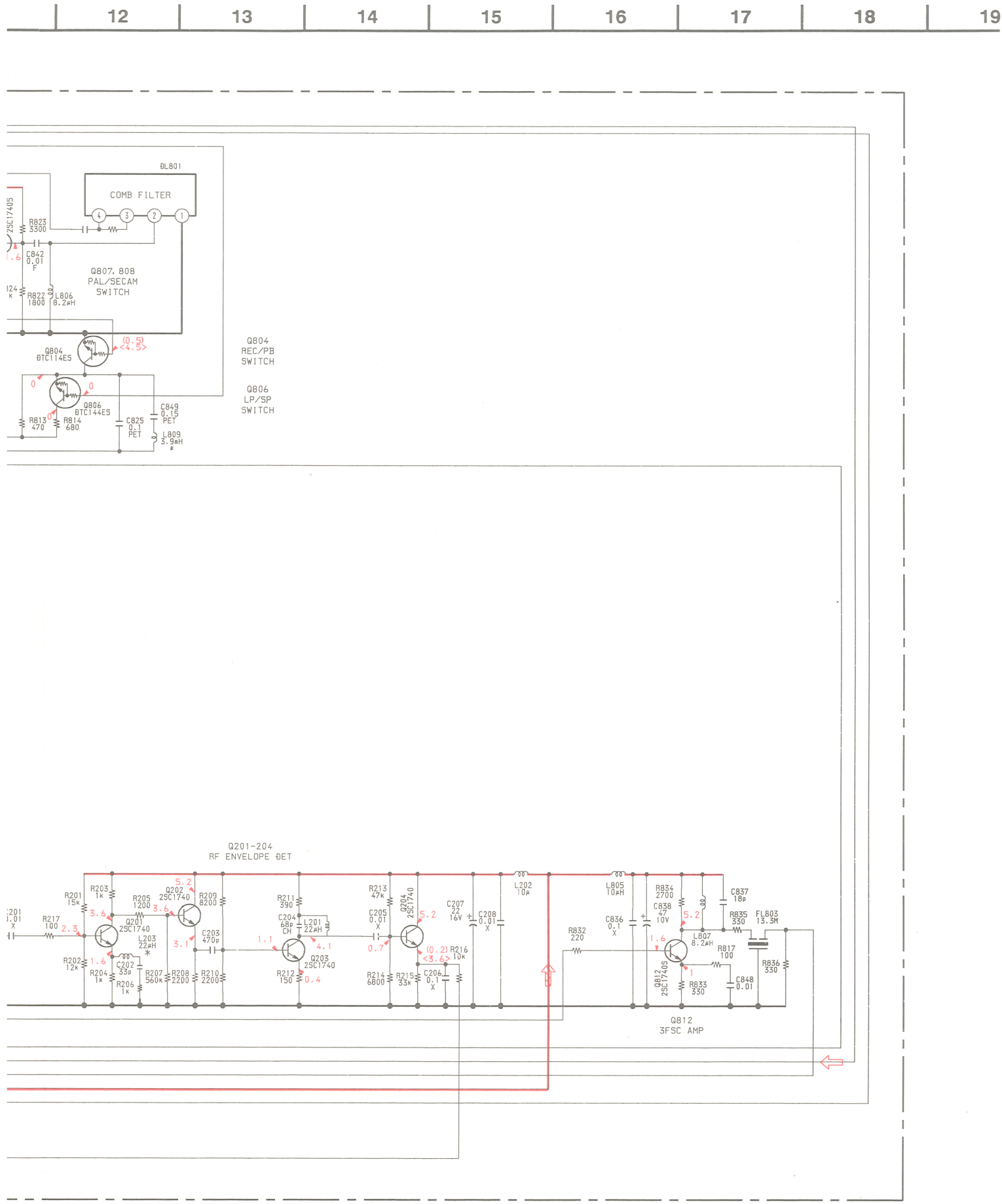
12
13
14
15
16
17
18
19
DL801
COMB FILTER
Q807, 808
PAL/SECAM
SWITCH
Q804
REC/PB
SWITCH
Q806
LP/SP
SWITCH
Q201-204
RF ENVELOPE DET
Q812
3FSC AMP

PC-54 (CHROMA PROCESS) PRINTED WIRING BOARD

— Ref. No. PC-54 BOARD: 7000 series —

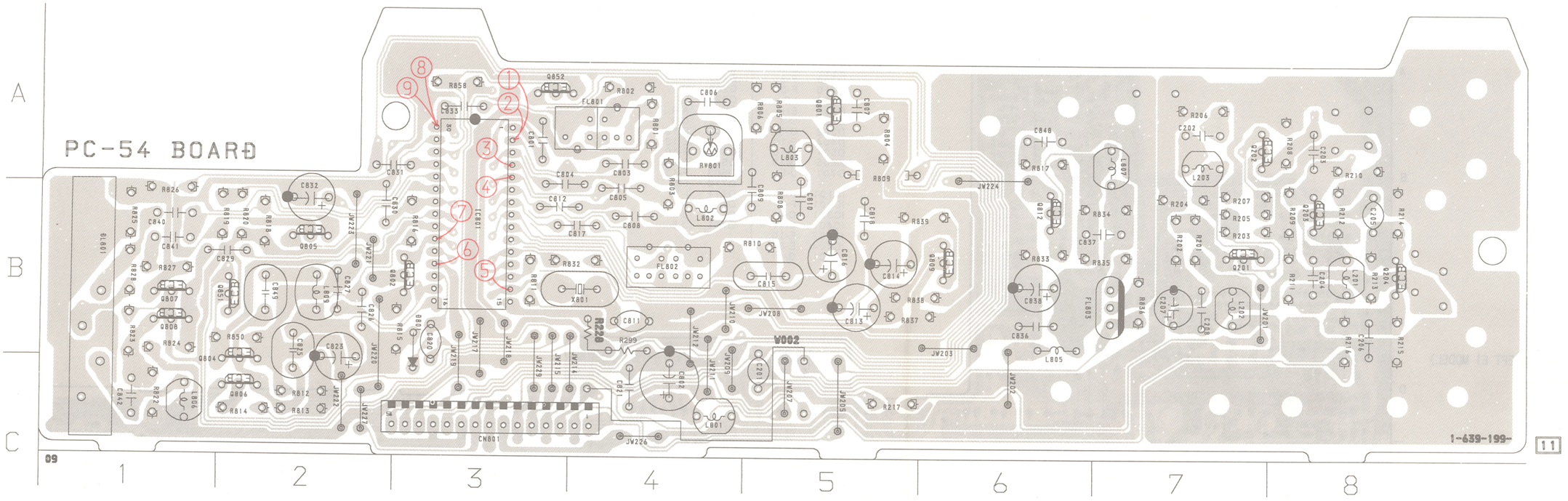

PC-54 BOARD

D801	B-3
IC801	B-3
Q201	B-7
Q202	A-7
Q203	B-8
Q204	B-8
Q801	A-5
Q802	B-3
Q804	C-2
Q805	B-2
Q806	C-2
Q807	B-1
Q808	B-1
Q809	B-6
Q812	B-6
Q851	B-2
Q852	A-3

〈 DIODE 〉

D801	8-719-911-19	DIODE 1SS119

〈 IC 〉

IC801	8-759-320-78	IC HA118016NT

〈 TRANSISTOR 〉

Q201	8-729-119-78	TRANSISTOR 2SC2785-HFE
Q202	8-729-119-78	TRANSISTOR 2SC2785-HFE
Q203	8-729-119-78	TRANSISTOR 2SC2785-HFE
Q204	8-729-119-78	TRANSISTOR 2SC2785-HFE
Q801	8-729-119-78	TRANSISTOR 2SC2785-HFE
Q802	8-729-119-78	TRANSISTOR 2SC2785-HFE
Q804	8-729-900-80	TRANSISTOR DTC114ES
Q805	8-729-119-76	TRANSISTOR 2SA1175-HFE
Q806	8-729-900-89	TRANSISTOR DTC144ES
Q807	8-729-119-78	TRANSISTOR 2SC2785-HFE
Q808	8-729-119-78	TRANSISTOR 2SC2785-HFE
Q809	8-729-119-78	TRANSISTOR 2SC2785-HFE
Q812	8-729-119-78	TRANSISTOR 2SC2785-HFE
Q851	8-729-903-02	TRANSISTOR DTA143XS
Q852	8-729-900-89	TRANSISTOR DTC144ES

MA-125 (SERVO/SYSTEM CONTROL/TUNER, AUDIO) PRINTED WIRING BOARD

— Ref. No. MA-125 BOARD: 1000 series —

MA-125 BOARD

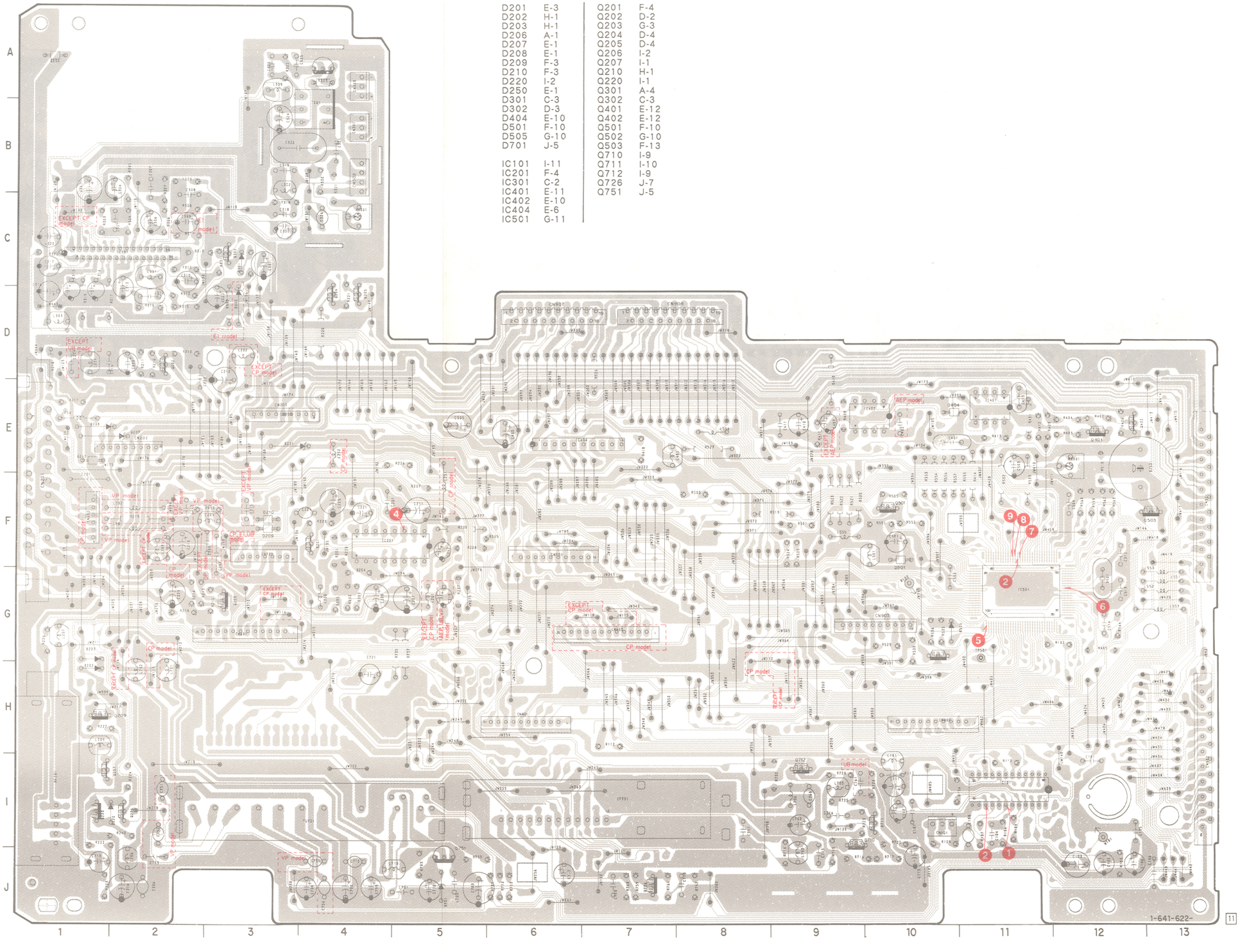

MA-125 BOARD

D201	E-3	Q201	F-4
D202	H-1	Q202	D-2
D203	H-1	Q203	G-3
D206	A-1	Q204	D-4
D207	E-1	Q205	D-4
D208	E-1	Q206	I-2
D209	F-3	Q207	I-1
D210	F-3	Q210	H-1
D220	I-2	Q220	I-1
D250	E-1	Q301	A-4
D301	C-3	Q302	C-3
D302	D-3	Q401	E-12
D404	E-10	Q402	E-12
D501	F-10	Q501	F-10
D505	G-10	Q502	G-10
D701	J-5	Q503	F-13
		Q710	I-9
IC101	I-11	Q711	I-10
IC201	F-4	Q712	I-9
IC301	C-2	Q726	J-7
IC401	E-11	Q751	J-5
IC402	E-10		
IC404	E-6		
IC501	G-11		

〈 DIODE 〉

D201	8-719-974-59	DIODE 1SR139-100
D202	8-719-109-97	DIODE RD6.8ES-B2
D203	8-719-109-97	DIODE RD6.8ES-B2
D206	8-719-109-97	DIODE RD6.8ES-B2
D207	8-719-109-97	DIODE RD6.8ES-B2
D208	8-719-109-97	DIODE RD6.8ES-B2
D209	8-719-109-97	DIODE RD6.8ES-B2
D210	8-719-109-97	DIODE RD6.8ES-B2
D220	8-719-987-06	DIODE WG713A
D220	8-719-911-19	DIODE 1SS119
D250	8-719-109-97	DIODE RD6.8ES-B2
D301	8-719-987-06	DIODE WG713A
D301	8-719-911-19	DIODE 1SS119
D302	8-719-987-06	DIODE WG713A (EXCEPT EI MODEL)
D404	8-719-109-85	DIODE RD5.1ES-B2
D501	8-719-109-97	DIODE RD6.8ES-B2
D505	8-719-987-06	DIODE WG713A
D505	8-719-911-19	DIODE 1SS119
D701	8-719-982-26	DIODE MTZJ-33B

〈 IC 〉

IC101	8-759-246-14	IC TA8823N
IC201	8-759-007-21	IC MC74HC4053N
IC301	8-759-805-20	IC LA7297
IC401	8-759-503-91	IC TL082ACP
IC402	8-759-008-70	IC LM358N
IC404	8-759-983-45	IC BA6238A
IC501	8-752-817-87	IC CXP80624-209Q (CP, UB MODEL)
IC501	8-752-832-90	IC CXP80624-253Q (AEP, EI, VP MODEL)

〈 TRANSISTOR 〉

Q201	8-729-119-78	TRANSISTOR 2SC2785-HFE
Q202	8-729-119-78	TRANSISTOR 2SC2785-HFE
Q203	8-729-119-78	TRANSISTOR 2SC2785-HFE
Q204	8-729-119-76	TRANSISTOR 2SA1175-HFE
Q205	8-729-900-89	TRANSISTOR DTC144ES
Q206	8-729-119-76	TRANSISTOR 2SA1175-HFE
Q207	8-729-119-76	TRANSISTOR 2SA1175-HFE
Q210	8-729-900-89	TRANSISTOR DTC144ES
Q220	8-729-119-78	TRANSISTOR 2SC2785-HFE
Q301	8-729-111-55	TRANSISTOR 2SC1509
Q302	8-729-119-78	TRANSISTOR 2SC2785-HFE
Q401	8-729-119-78	TRANSISTOR 2SC2785-HFE
Q402	8-729-119-76	TRANSISTOR 2SA1175-HFE
Q501	8-729-119-78	TRANSISTOR 2SC2785-HFE
Q502	8-729-900-89	TRANSISTOR DTC144ES
Q503	8-729-900-89	TRANSISTOR DTC144ES
Q710	8-729-119-78	TRANSISTOR 2SC2785-HFE
Q711	8-729-119-78	TRANSISTOR 2SC2785-HFE
Q712	8-729-119-76	TRANSISTOR 2SA1175-HFE
Q726	8-729-119-78	TRANSISTOR 2SC2785-HFE
Q751	8-729-111-55	TRANSISTOR 2SC1509

Note: The components identified by mark ⚠ or dotted line with mark ⚠ are critical for safty.
Replace only with part number specified.

- **SIGNAL PATH**

	VIDEO SIGNAL			AUDIO SIGNAL
	CHROMA	Y	Y/CHROMA	
REC	➡		➡	➡
PB	⇨		⇨	⇨

	REC	REC/PB	PB
Drum speed servo		▷	
Drum phase servo		▷	
Drum servo (speed and phase)		▷	
Capstan speed servo		▷	
Capstan phase servo	▶	▷	▷
Capstan servo (speed and phase)		▷	
Ref. signal	▶		▷

MA-125 BOARD

1 6.5Vp-p, 2V — IC101 (7) REC

2 2V — IC101 (10) 4.6Vp-p; IC501 (67) 5.2Vp-p — IC101 (10) REC, IC501 (67) REC/PB

3 1Vp-p, 1.5kHz — IC101 (18) REC/PB

4 0.9Vp-p, H — IC201 (14) REC

5 4.8Vp-p, 2V — IC501 (1) REC/PB

6 4.5Vp-p, 12.1MHz — IC501 (42) REC/PB

7 5.2Vp-p, V — IC501 (66) REC/PB

8 5Vp-p, 2V — IC501 (68) REC/PB

9 5Vp-p, 6.5msec — IC501 (69) REC/PB

10 5.2Vp-p, 0.65msec — IC501 (70) REC/PB

MA-125 (SERVO/SYSTEM CONTROL/TUNER) SCHEMATIC DIAGRAM

— Ref. No. MA-125 BOARD: 1000 series —

TO MA-125 BOARD (1/2) (See Page 84): GND (A), A IN, NA PB, GND (A), A OUT, A MUTE, REC P, SW 9V

TO CN501

CN202 8P WHT: GND (A), SW 9V, SW 5V, GND (SW), UNSW 5.8V, DC +35V, GND (UNSW), POWER CTRL

TO POWER BLOCK CN711 (See Page 109)

CN203 9P BLA: F 0V, F 3.6V, F -30V, UNSW 12V, GND (SW), MTR 12V, MTR 12V, GND (MTR), GND (MTR)

TO POWER BLOCK CN712 (See Page 109)

REFER ABOUE: L291 220µH, R219 180, JW124, JW998, L292 220µH, R999 180, L205 220µH, C205, C215 1000p, C292 470p

CHASSIS GND

CN201 21P EURO AV

CN602 6P WHT: GND, B, GND, G, GND, R

CPmodel only

TO CP-53 BOARD CN112 (See Page 88)

D208 MTZJ-6.8, D207 MTZJ-6.8, D206 MTZJ-6.8, D250 MTZJ-6.8

L201 100µH, R201 10k, R229 10k, C201 0.01 Y, C211 47 16V, C221 22 16V

C202 0.01 Y, C212 47 16V, L202 100µH, R206 1k, R207 1k

Q202 BUFFER: R210 47k, C222 47 6.3V, L204 220µH, R217 1k, JW123, R218 1k, R211 68k, Q202 2SC1740, R212 2200, C204 150p, C214 150p

REFER ABOUE

D210 MTZJ-6.8, D209 MTZJ-6.8, L203 100µH, C203 0.01 Y, C213 47 16V, R216 75

C231 0.001 B, D202 MTZJ-6.8, D203 MTZJ-6.8

Q204, 205 AV CONTROL SWITCH: Q204 2SA933, L250 120µH, R220 1k, R237 0W

R221 5600, Q205 DTC144ES

UNSW. 12V — JW113, JW114 — CPmodel only / Except CPmodel

C216 47 16V, L206 100µH, C206 0.01 X

Q220, 206 VIDEO SIGNAL BUFFER: Q220 2SC1740, R240 10k, R224 68, D220 1SS133, Q206 2SA933, R222 180, L207 120µH

C219 100 10V, R223 220, R226 10k

L209 33µH, Q207 2SA933, R227 1k, Q210 DTC144ES

Q207 SW 5V REG

Q210 SWITCH

5696

AERIAL OUT, AERIAL IN

RF201 (RFU MODURATOR) ⚠

5	UNSW 5V	5
4	SW 5V/TV VTR	4
3	MOD A	3
2	MOD V	2
1	GND (SW)	1

CHASSIS GND

RF_CTRL

G2

09

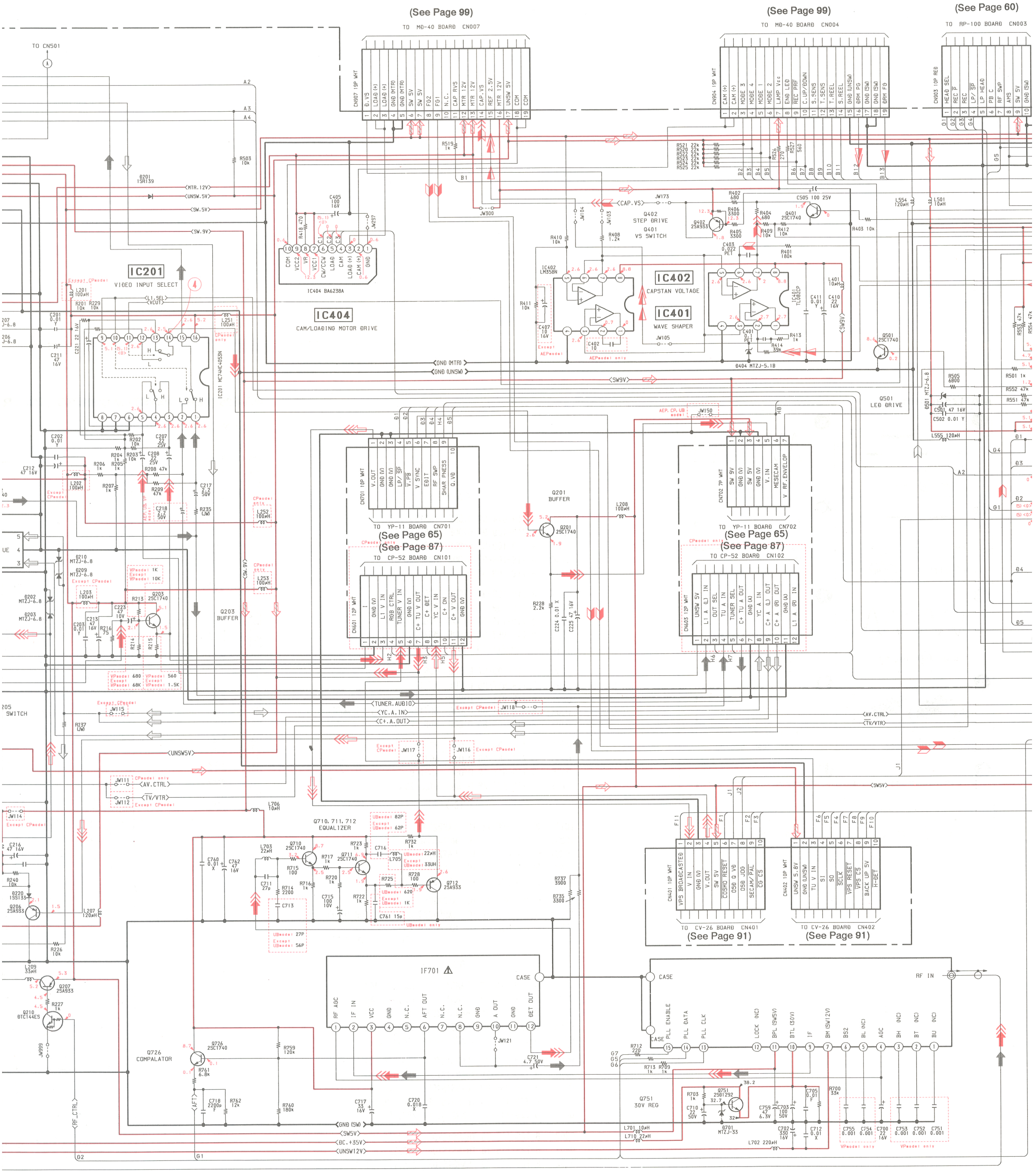
(See Page 99)
TO MD-40 BOARD CN007
CN907 19P WHT
(See Page 99)
TO MD-40 BOARD CN004
CN904 19P WHT
(See Page 60)
TO RP-100 BOARD CN003
CN903 10P RED
TO CN501
IC201
VIDEO INPUT SELECT
IC404
CAM/LOADING MOTOR DRIVE
IC404 BA6238A
IC402
CAPSTAN VOLTAGE
IC401
WAVE SHAPER
Q402 STEP DRIVE
Q401 VS SWITCH
Q201 BUFFER
Q203 BUFFER
Q726 COMPALATOR
Q710, 711, 712 EQUALIZER
Q751 30V REG
Q501 LED DRIVE
IF701
CN701 10P WHT
TO YP-11 BOARD CN701
(See Page 65)
(See Page 87)
CN702 7P WHT
TO YP-11 BOARD CN702
(See Page 65)
(See Page 87)
CN601 12P WHT
TO CP-52 BOARD CN101
CN602 12P WHT
TO CP-52 BOARD CN102
CN401 10P WHT
TO CV-26 BOARD CN401
(See Page 91)
CN402 10P WHT
TO CV-26 BOARD CN402
(See Page 91)
<MTR.12V>
<UNSW.5V>
<SW.5V>
<SW.9V>
<CAP.VS>
<GND (MTR)>
<GND (UNSW)>
<SW9V>
<SW5V>
<TUNER.AUDIO>
<YC.A.IN>
<C+.A.OUT>
<AV.CTRL>
<TV/VTR>
<UNSW5V>
<RF_CTRL>
<AFT>
<BC.+35V>
<UNSW12V>
RF IN
CASE

16 17 18 19 20 21 22 23 24 25 26

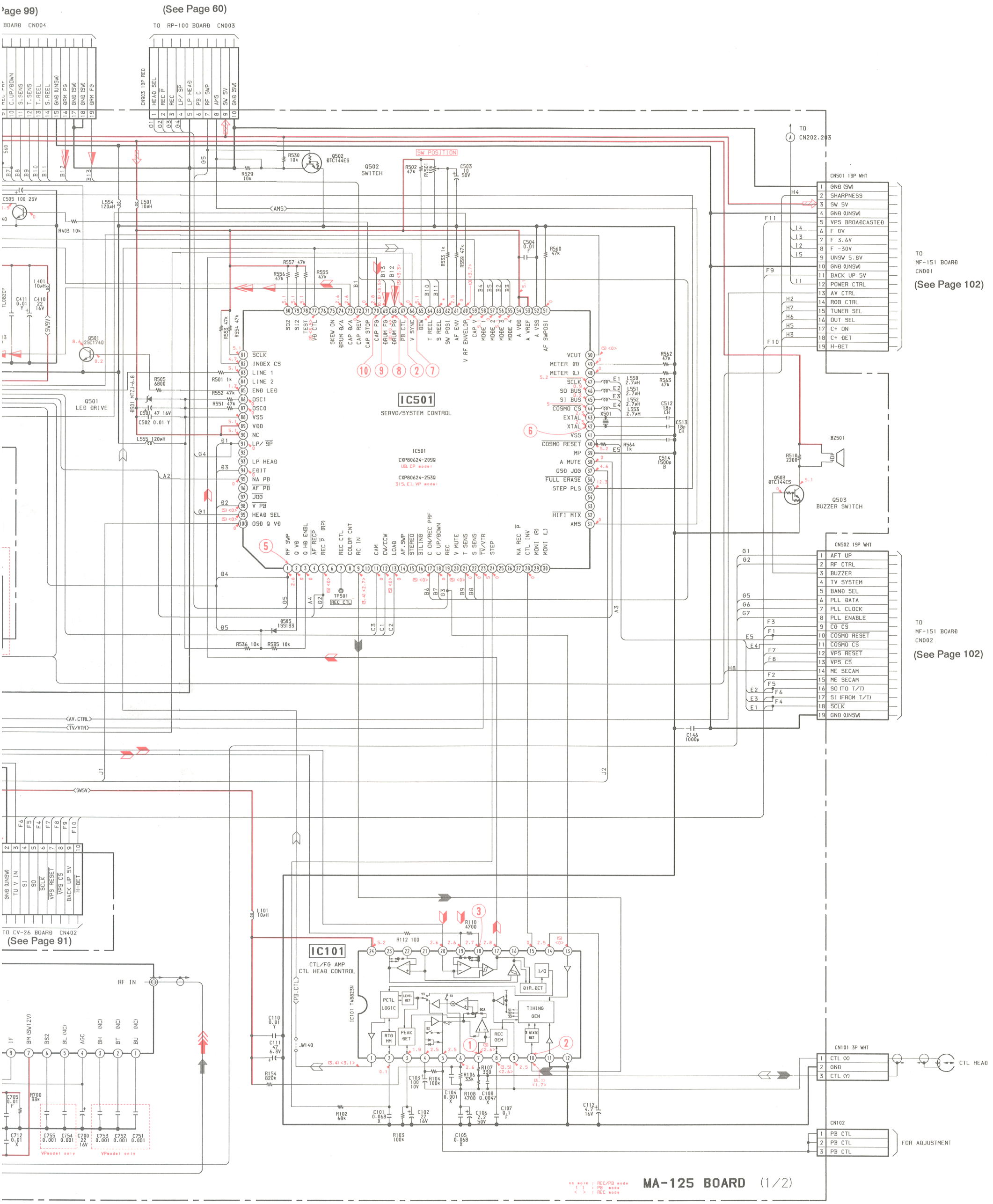

MA-125 BOARD (1/2)

MA-125 BOARD

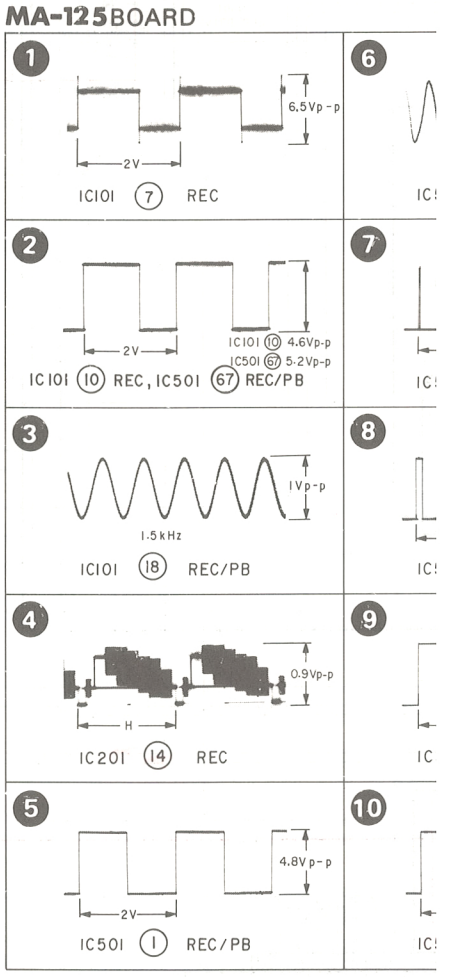
1
6.5Vp-p
2V
IC101 (7) REC
2
2V
IC101 (10) 4.6Vp-p
IC501 (67) 5.2Vp-p
IC101 (10) REC, IC501 (67) REC/PB
3
1Vp-p
1.5kHz
IC101 (18) REC/PB
4
0.9Vp-p
H
IC201 (14) REC
5
4.8Vp-p
2V
IC501 (1) REC/PB
6
7
8
9
10

MA-125 BOARD

〈 DIODE 〉

D201	8-719-974-59	DIODE	1SR139-100
D202	8-719-109-97	DIODE	RD6.8ES-B2
D203	8-719-109-97	DIODE	RD6.8ES-B2
D206	8-719-109-97	DIODE	RD6.8ES-B2
D207	8-719-109-97	DIODE	RD6.8ES-B2
D208	8-719-109-97	DIODE	RD6.8ES-B2
D209	8-719-109-97	DIODE	RD6.8ES-B2
D210	8-719-109-97	DIODE	RD6.8ES-B2
D220	8-719-987-06	DIODE	WG713A
D220	8-719-911-19	DIODE	1SS119
D250	8-719-109-97	DIODE	RD6.8ES-B2
D301	8-719-987-06	DIODE	WG713A
D301	8-719-911-19	DIODE	1SS119
D302	8-719-987-06	DIODE	WG713A (EXCEPT EI MODEL)
D404	8-719-109-85	DIODE	RD5.1ES-B2
D501	8-719-109-97	DIODE	RD6.8ES-B2
D505	8-719-987-06	DIODE	WG713A
D505	8-719-911-19	DIODE	1SS119
D701	8-719-982-26	DIODE	MTZJ-33B

〈 IC 〉

IC101	8-759-246-14	IC	TA8823N
IC201	8-759-007-21	IC	MC74HC4053N
IC301	8-759-805-20	IC	LA7297
IC401	8-759-503-91	IC	TL082ACP
IC402	8-759-008-70	IC	LM358N
IC404	8-759-983-45	IC	BA6238A
IC501	8-752-817-87	IC	CXP80624-209Q (CP, UB MODEL)
IC501	8-752-832-90	IC	CXP80624-253Q (AEP, EI, VP MODEL)

〈 TRANSISTOR 〉

Q201	8-729-119-78	TRANSISTOR	2SC2785-HFE
Q202	8-729-119-78	TRANSISTOR	2SC2785-HFE
Q203	8-729-119-78	TRANSISTOR	2SC2785-HFE
Q204	8-729-119-76	TRANSISTOR	2SA1175-HFE
Q205	8-729-900-89	TRANSISTOR	DTC144ES
Q206	8-729-119-76	TRANSISTOR	2SA1175-HFE
Q207	8-729-119-76	TRANSISTOR	2SA1175-HFE
Q210	8-729-900-89	TRANSISTOR	DTC144ES
Q220	8-729-119-78	TRANSISTOR	2SC2785-HFE
Q301	8-729-111-55	TRANSISTOR	2SC1509
Q302	8-729-119-78	TRANSISTOR	2SC2785-HFE
Q401	8-729-119-78	TRANSISTOR	2SC2785-HFE
Q402	8-729-119-76	TRANSISTOR	2SA1175-HFE
Q501	8-729-119-78	TRANSISTOR	2SC2785-HFE
Q502	8-729-900-89	TRANSISTOR	DTC144ES
Q503	8-729-900-89	TRANSISTOR	DTC144ES
Q710	8-729-119-78	TRANSISTOR	2SC2785-HFE
Q711	8-729-119-78	TRANSISTOR	2SC2785-HFE
Q712	8-729-119-76	TRANSISTOR	2SA1175-HFE
Q726	8-729-119-78	TRANSISTOR	2SC2785-HFE
Q751	8-729-111-55	TRANSISTOR	2SC1509

MA-125 (SERVO/SYSTEM CONTROL/TUNER, A

— Ref. No. MA-125 BOARD: 1000 series —

MA-125 BOARD

D201	E-3
D202	H-1
D203	H-1
D206	A-1
D207	E-1
D208	E-1
D209	F-3
D210	F-3
D220	I-2
D250	E-1
D301	C-3
D302	D-3
D404	E-10
D501	F-10
D505	G-10
D701	J-5
IC101	I-11
IC201	F-4
IC301	C-2
IC401	E-11
IC402	E-10
IC404	E-6
IC501	G-11
Q201	F-4
Q202	D-2
Q203	G-3
Q204	D-4
Q205	D-4
Q206	I-2
Q207	I-1
Q210	H-1
Q220	I-1
Q301	A-4
Q302	C-3
Q401	E-12
Q402	E-12
Q501	F-10
Q502	G-10
Q503	F-13
Q710	I-9
Q711	I-10
Q712	I-9
Q726	J-7
Q751	J-5

MA-125 BOARD

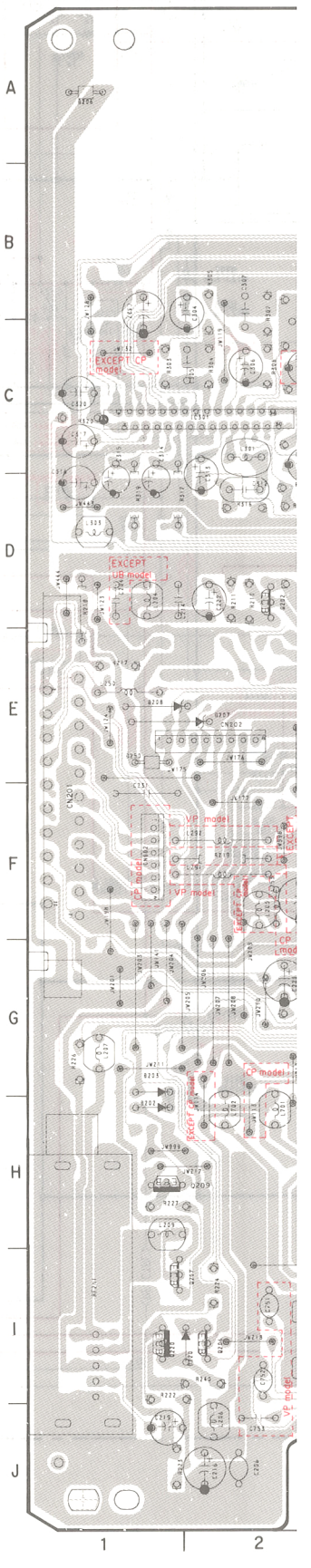

CONTROL/TUNER, AUDIO) PRINTED WIRING BOARD

eries —

-125 BOARD

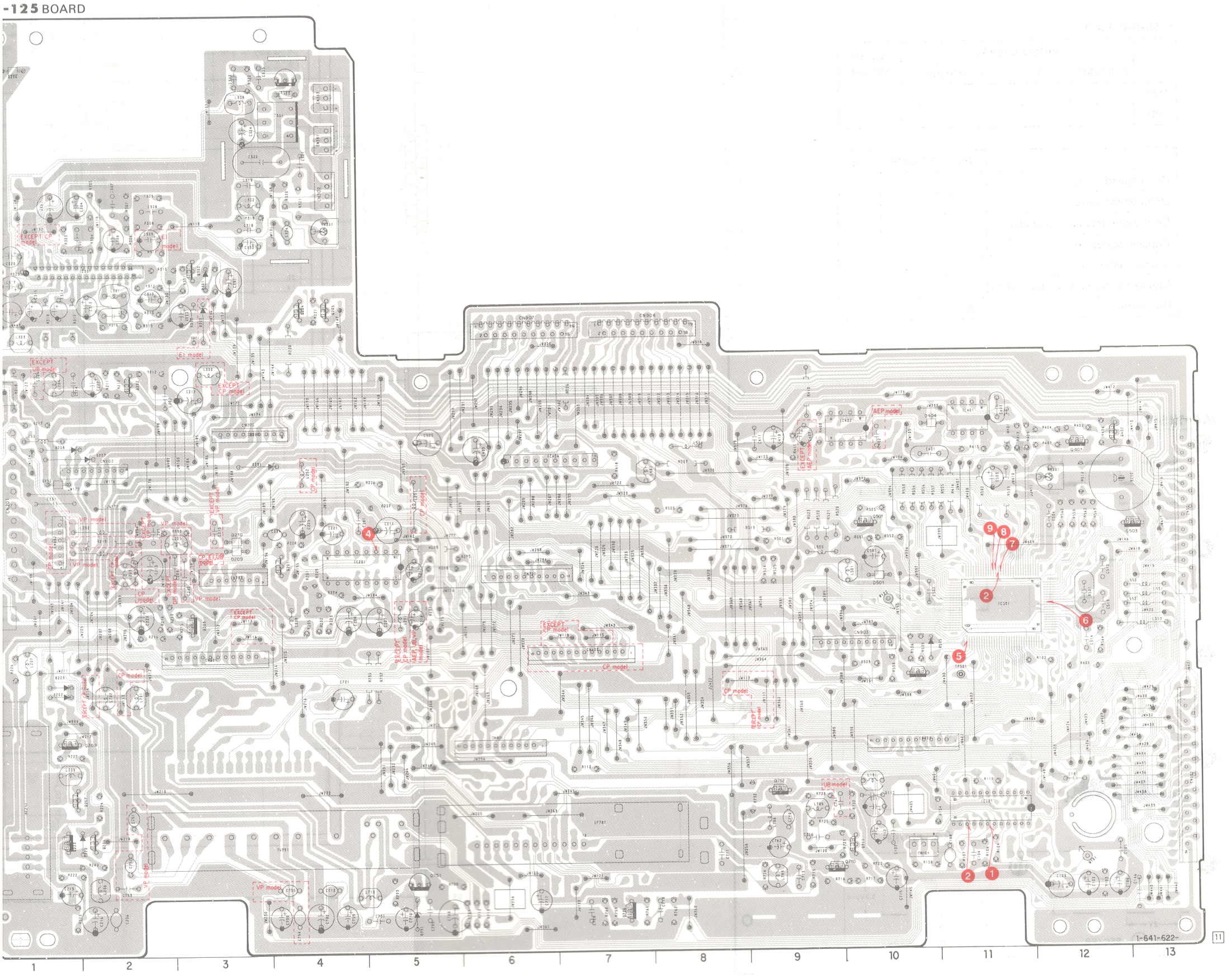

AUDIO AUDIO

MA-125 (AUDIO) SCHEMATIC DIAGRAM

— Ref. No. MA-125 BOARD: 1000 series —

(See Page 75)

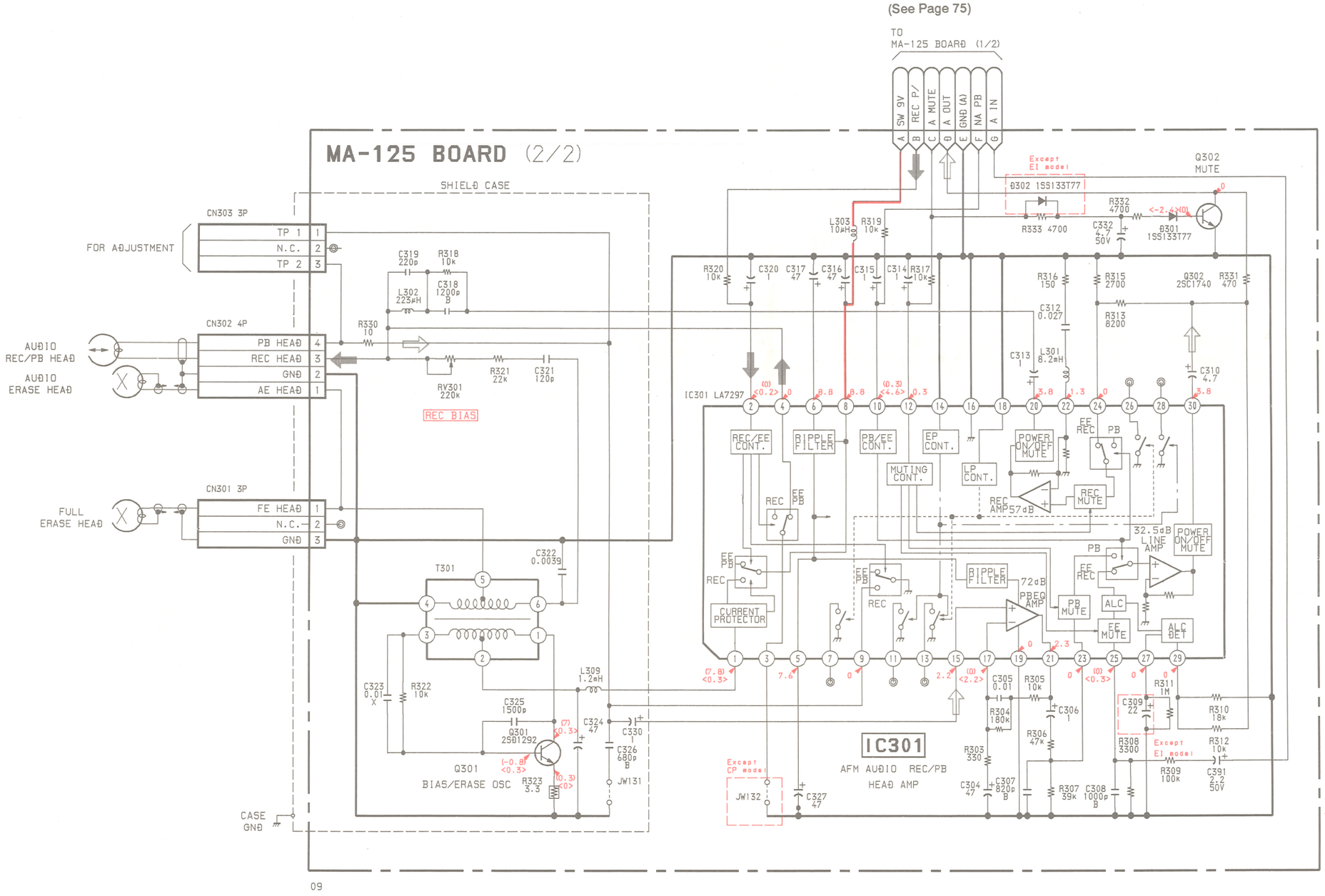

• **SIGNAL PATH**

	VIDEO SIGNAL			AUDIO SIGNAL
	CHROMA	Y	Y/CHROMA	
REC				➡
PB				⇨

CP-52 (VIDEO/AUDIO SELECTOR), CP-53 (CANAL PLUS JACK) PRINTED WIRING BOARDS

— Ref. No. CP-52 BOARD: 2000 series, CP-53 BOARD: 3000 series —

CP-52 BOARD

D001 A-6
D180 A-2
D181 A-2
D182 A-2
D183 A-2
D280 A-1
D281 A-1

IC101 B-3
IC201 A-6

Q101 B-4
Q102 A-4
Q103 B-4
Q126 B-1
Q127 C-1
Q180 A-3
Q201 A-5
Q202 B-5
Q203 B-5

CP-52 BOARD (CP MODEL)

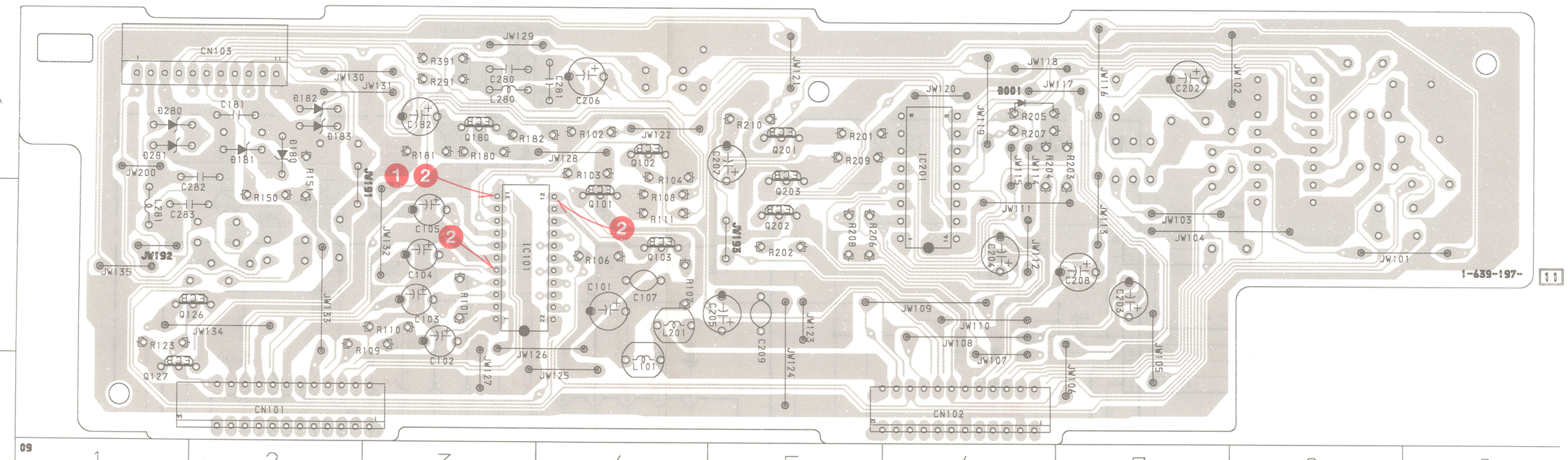

CP-53 BOARD (CP MODEL)

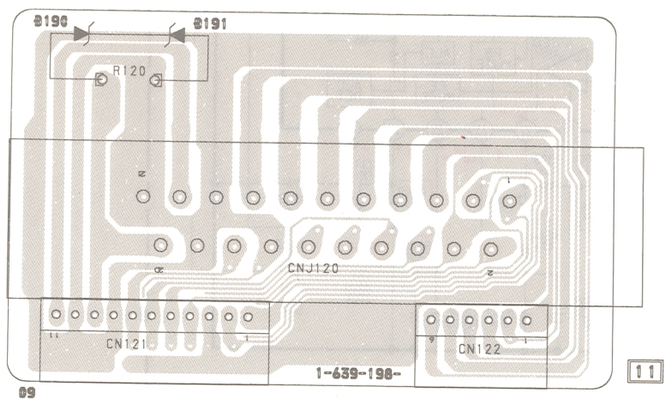

〈 DIODE 〉

D190 8-719-109-97 DIODE RD6.8ES-B2
D191 8-719-109-97 DIODE RD6.8ES-B2

〈 DIODE 〉

D001 8-719-940-82 DIODE SLR-34MC3
D180 8-719-109-97 DIODE RD6.8ES-B2
D181 8-719-109-97 DIODE RD6.8ES-B2
D182 8-719-109-97 DIODE RD6.8ES-B2
D183 8-719-109-97 DIODE RD6.8ES-B2

D280 8-719-109-97 DIODE RD6.8ES-B2
D281 8-719-109-97 DIODE RD6.8ES-B2

〈 IC 〉

IC101 8-759-504-94 IC BA7630S
IC201 8-759-509-16 IC XRU4053B

〈 TRANSISTOR 〉

Q101 8-729-119-89 TRANSISTOR 2SC2785-HFE
Q102 8-729-900-89 TRANSISTOR DTC144ES
Q103 8-729-920-68 TRANSISTOR 2SA933S
Q126 8-729-900-89 TRANSISTOR DTC144ES
Q127 8-729-920-68 TRANSISTOR 2SA933S

Q180 8-729-119-89 TRANSISTOR 2SC2785-HFE
Q201 8-729-119-89 TRANSISTOR 2SC2785-HFE
Q202 8-729-119-89 TRANSISTOR 2SC2785-HFE
Q203 8-729-119-89 TRANSISTOR 2SC2785-HFE

— Ref. No. CP-52 BOARD: 2000 series, CP-53 BOARD: 3000 series —

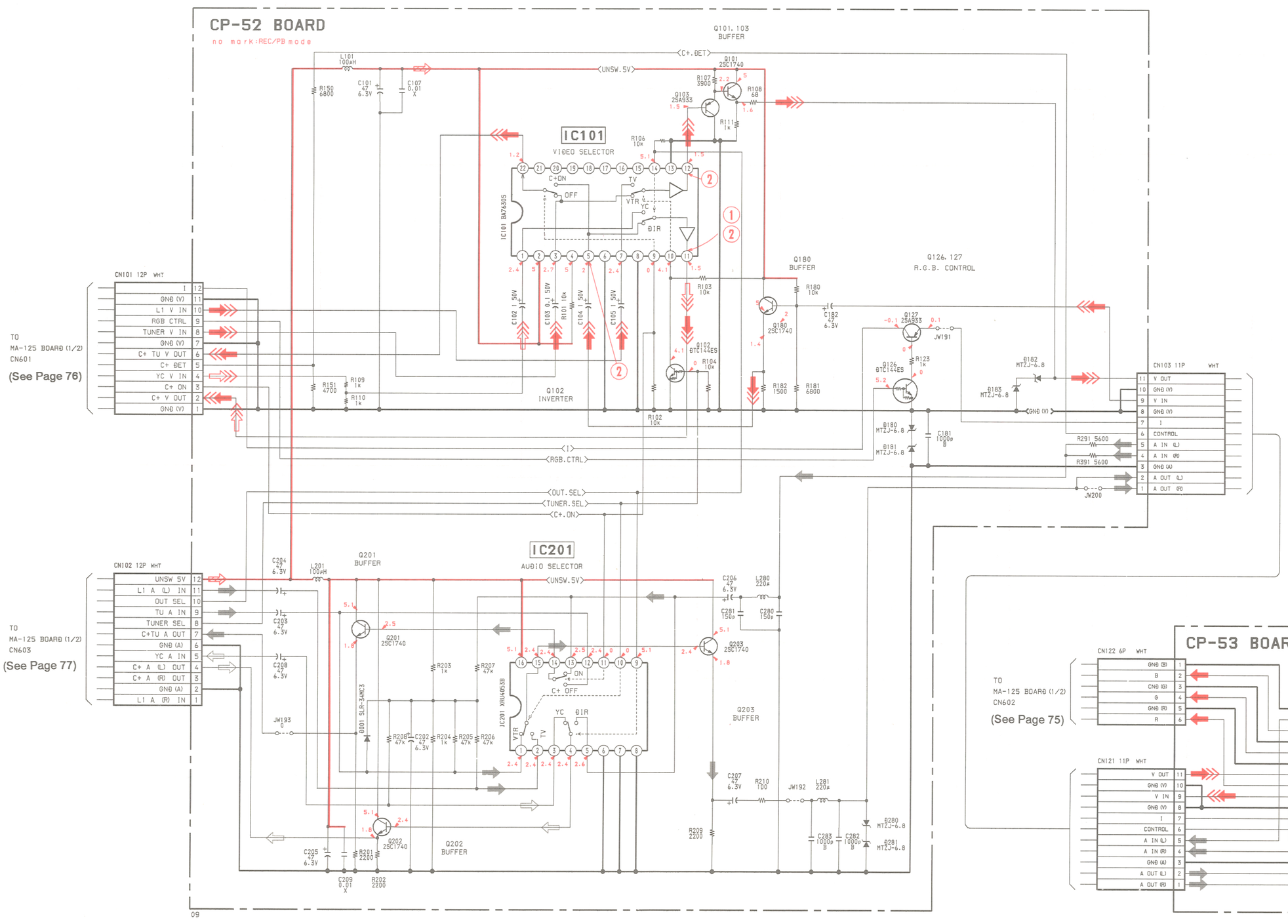

• SIGNAL PATH

	VIDEO SIGNAL		
	CHROMA	Y	Y/CHROMA
REC	➡		➡➡
PB			⇨⇨

CP-52 BOARD

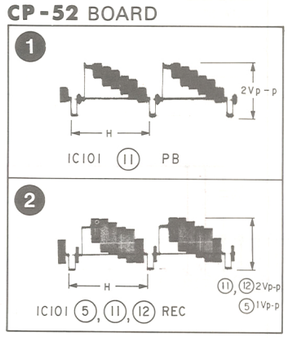

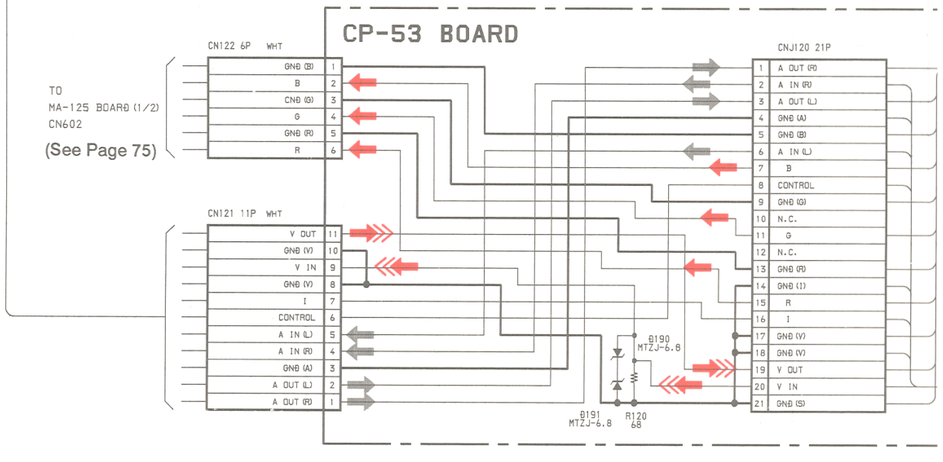

16	17	18	19	20	21	22

VIDEO SIGNAL		AUDIO SIGNAL
Y	Y/CHROMA	
	⇛	⇒
	⇨	⇨

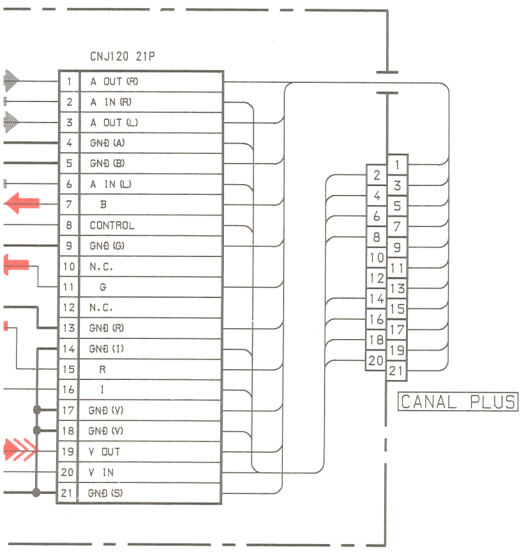

CV-26 BOARD

1
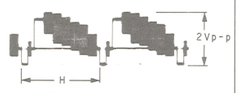

IC401 (12),(13) REC

2
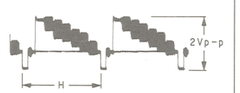

IC401 (12),(13) PB

3
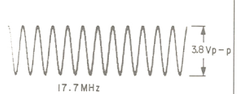

IC401 (29) REC/PB

4

IC401 (30) REC/PB

5

IC401 (31) REC/PB

• **SIGNAL PATH**

	VIDEO SIGNAL			AUDIO SIGNAL
	CHROMA	Y	Y/CHROMA	
REC				
PB			⇒	

CV-26 (ON SCREEN DISPLAY) SCHEMATIC DIAGRAM

— Ref. No. CV-26 BOARD: 8000 series —

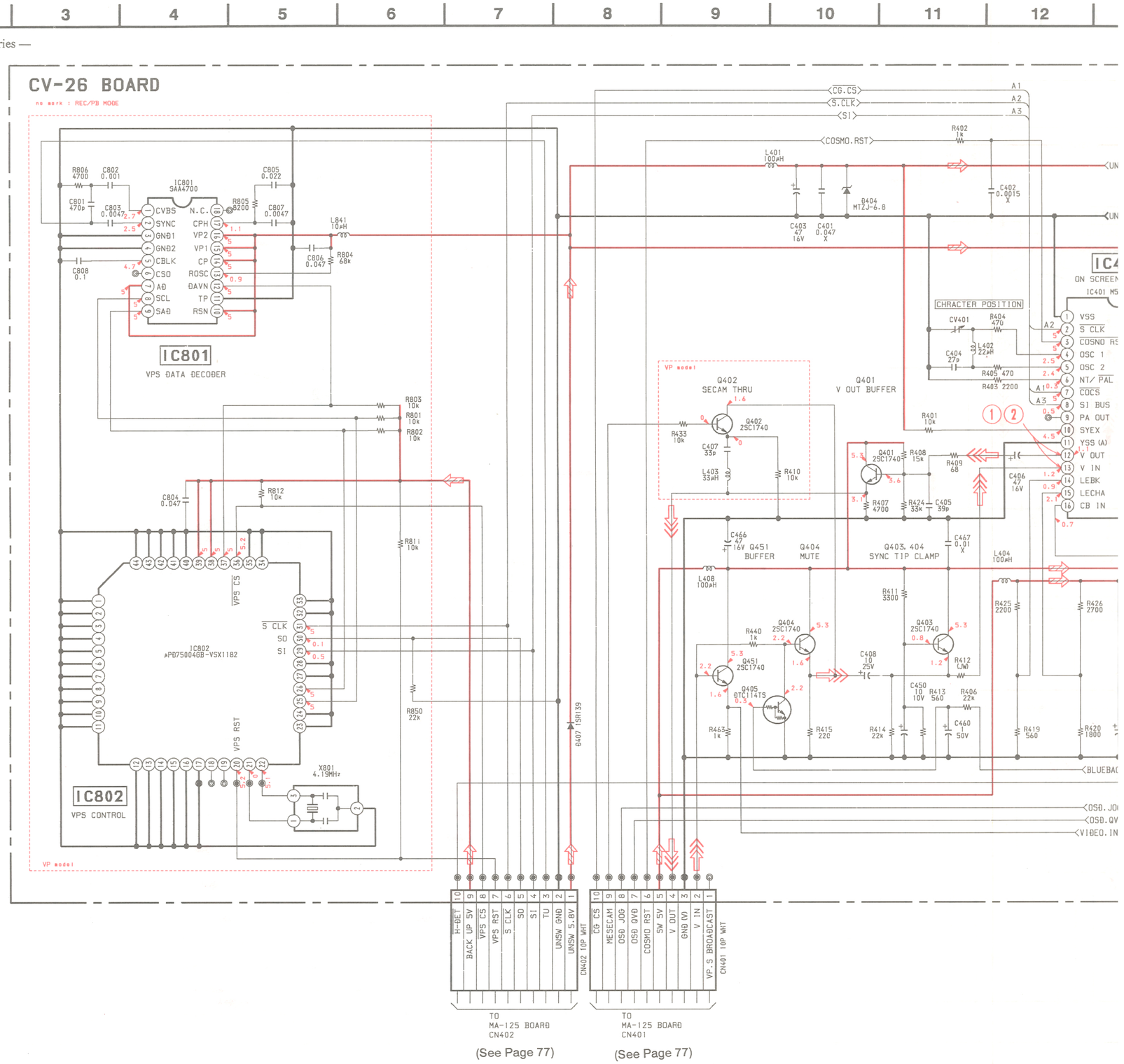

(See Page 77)

(See Page 77)

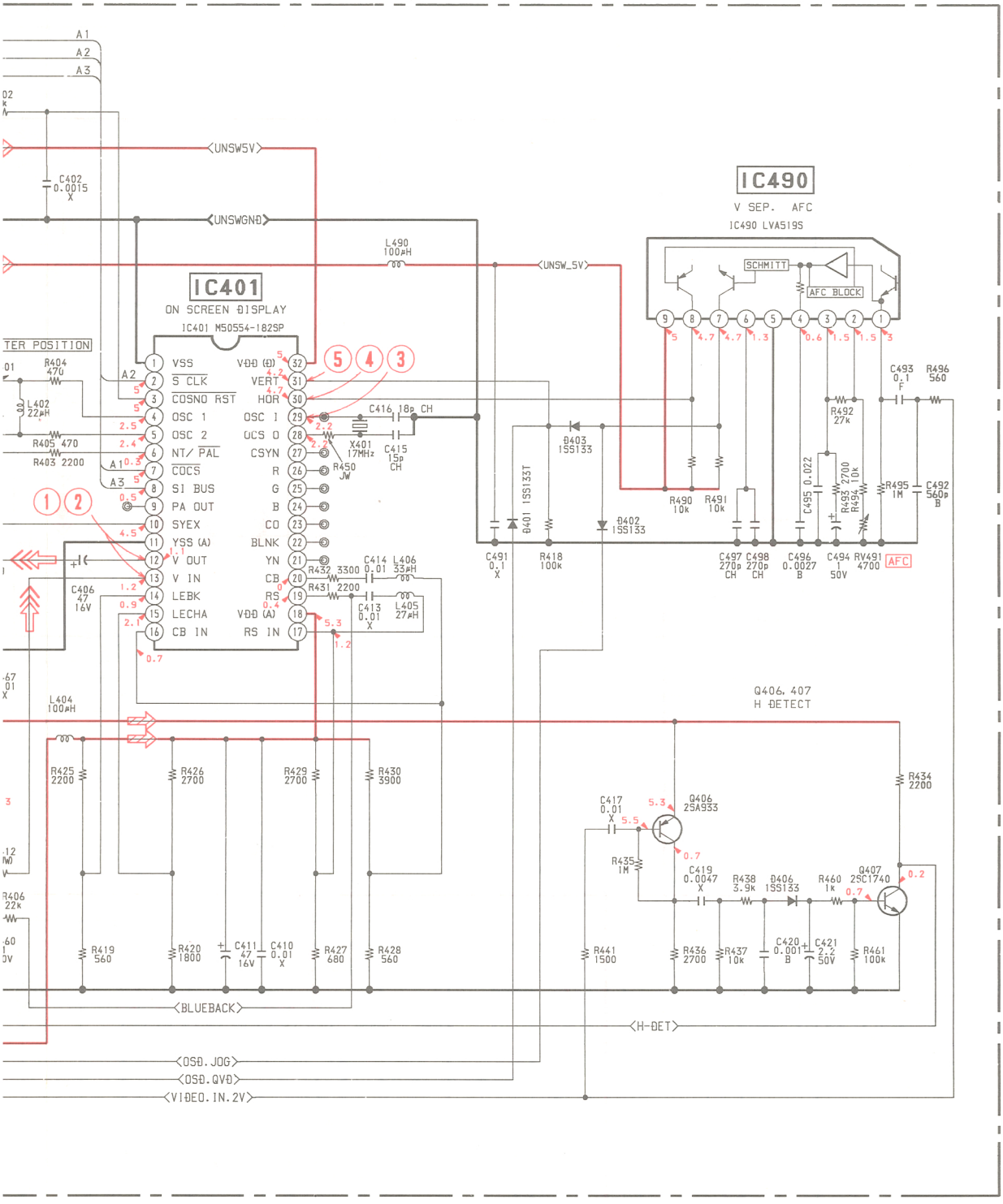
IC401
ON SCREEN DISPLAY
IC401 M50554-182SP
IC490
V SEP. AFC
IC490 LVA519S
SCHMITT
AFC BLOCK
<UNSW5V>
<UNSWGND>
<UNSW_5V>
L490 100μH
C402 0.0015 X
C416 18p CH
X401 17MHz
C415 15p CH
R450 JW
D403 1SS133
D401 1SS133T
D402 1SS133
C491 0.1 X
R418 100k
R490 10k
R491 10k
C497 270p CH
C498 270p CH
C496 0.0027 B
C494 1 50V
RV491 4700
AFC
C493 0.1 F
R496 560
R492 27k
C495 0.022
R493 2700
R494 10k
R495 1M
C492 560p B
R404 470
L402 22μH
R405 470
R403 2200
C406 47 16V
R432 3300
C414 0.01
L406 33μH
R431 2200
C413 0.01 X
L405 27μH
L404 100μH
Q406, 407
H DETECT
R425 2200
R426 2700
R429 2700
R430 3900
R434 2200
C417 0.01 X
Q406 2SA933
R435 1M
C419 0.0047 X
R438 3.9k
D406 1SS133
R460 1k
Q407 2SC1740
R406 22k
R419 560
R420 1800
C411 47 16V
C410 0.01 X
R427 680
R428 560
R441 1500
R436 2700
R437 10k
C420 0.001 B
C421 2.2 50V
R461 100k
<BLUEBACK>
<H-DET>
<OSD. JOG>
<OSD. QVD>
<VIDEO. IN. 2V>

CV-26 (ON SCREEN DISPLAY) PRINTED WIRING BOARD

— Ref. No. CV-26 BOARD: 8000 series —

CV-26 BOARD

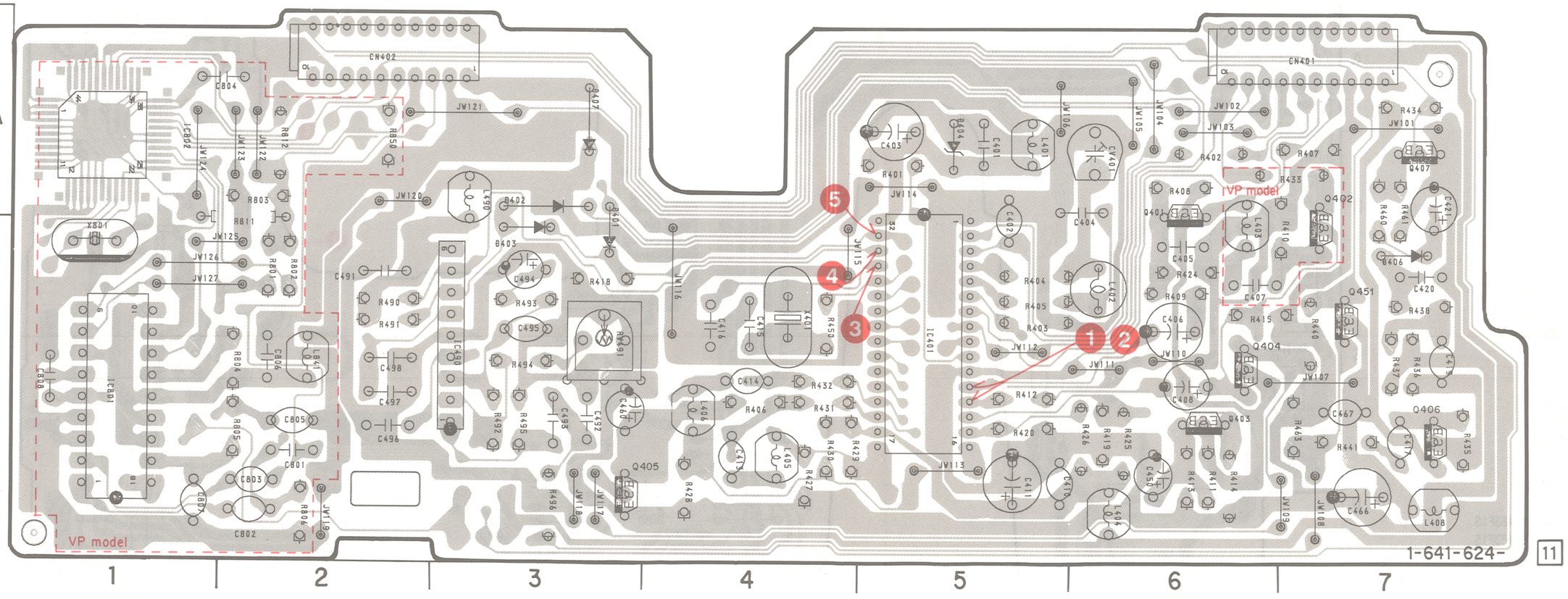

CV-26 BOARD

D401	B-2
D402	A-3
D403	B-3
D404	A-5
D406	B-7
D407	A-3
IC401	B-5
IC490	B-3
IC801	B-1
IC802	A-1
Q401	A-6
Q402	A-7
Q403	B-6
Q404	B-6
Q405	B-3
Q406	B-7
Q407	A-7
Q451	B-7

〈 DIODE 〉

D401	8-719-911-19	DIODE	1SS119
D402	8-719-911-19	DIODE	1SS119
D403	8-719-911-19	DIODE	1SS119
D404	8-719-109-97	DIODE	RD6.8ES-B2
D406	8-719-911-19	DIODE	1SS119
D407	8-719-974-59	DIODE	1SR139-100

〈 IC 〉

IC401	8-759-634-22	IC	M50554-182SP
IC490	8-759-996-03	IC	LVA519S
IC801	8-759-054-25	IC	SAA4700 (VP MODEL)
IC802	8-759-147-30	IC	uPD75004GB-VSX182 (VP MODEL)

〈 TRANSISTOR 〉

Q401	8-729-119-78	TRANSISTOR	2SC2785-HFE
Q402	8-729-119-78	TRANSISTOR	2SC2785-HFE (VP MODEL)
Q403	8-729-119-78	TRANSISTOR	2SC2785-HFE
Q404	8-729-119-78	TRANSISTOR	2SC2785-HFE
Q405	8-729-904-39	TRANSISTOR	DTC114TS
Q406	8-729-119-76	TRANSISTOR	2SA1175-HFE
Q407	8-729-119-78	TRANSISTOR	2SC2785-HFE
Q451	8-729-119-78	TRANSISTOR	2SC2785-HFE

MD-40 (MD DRIVE) PRINTED WIRING BOARD

— Ref. No. MD-40 BOARD: 2000 series —

MD-40 BOARD

D001 D-5
D004 F-6
D005 F-5

IC002 A-5
IC004 C-8
IC005 B-8

Q001 C-1
Q002 C-9

〈 DIODE 〉

D001 8-719-985-00 DIODE GL451VS1
D004 8-719-109-97 DIODE RD6.8ES-B2
D005 8-719-109-97 DIODE RD6.8ES-B2

〈 IC 〉

IC002 8-759-912-77 IC LM324N
IC004 8-759-420-83 IC AN3814K
IC005 8-759-987-16 IC LM393P

〈 TRANSISTOR 〉

Q001 8-729-926-31 TRANSISTOR PT483F1S
Q002 8-729-926-31 TRANSISTOR PT483F1S

MD-40 BOARD

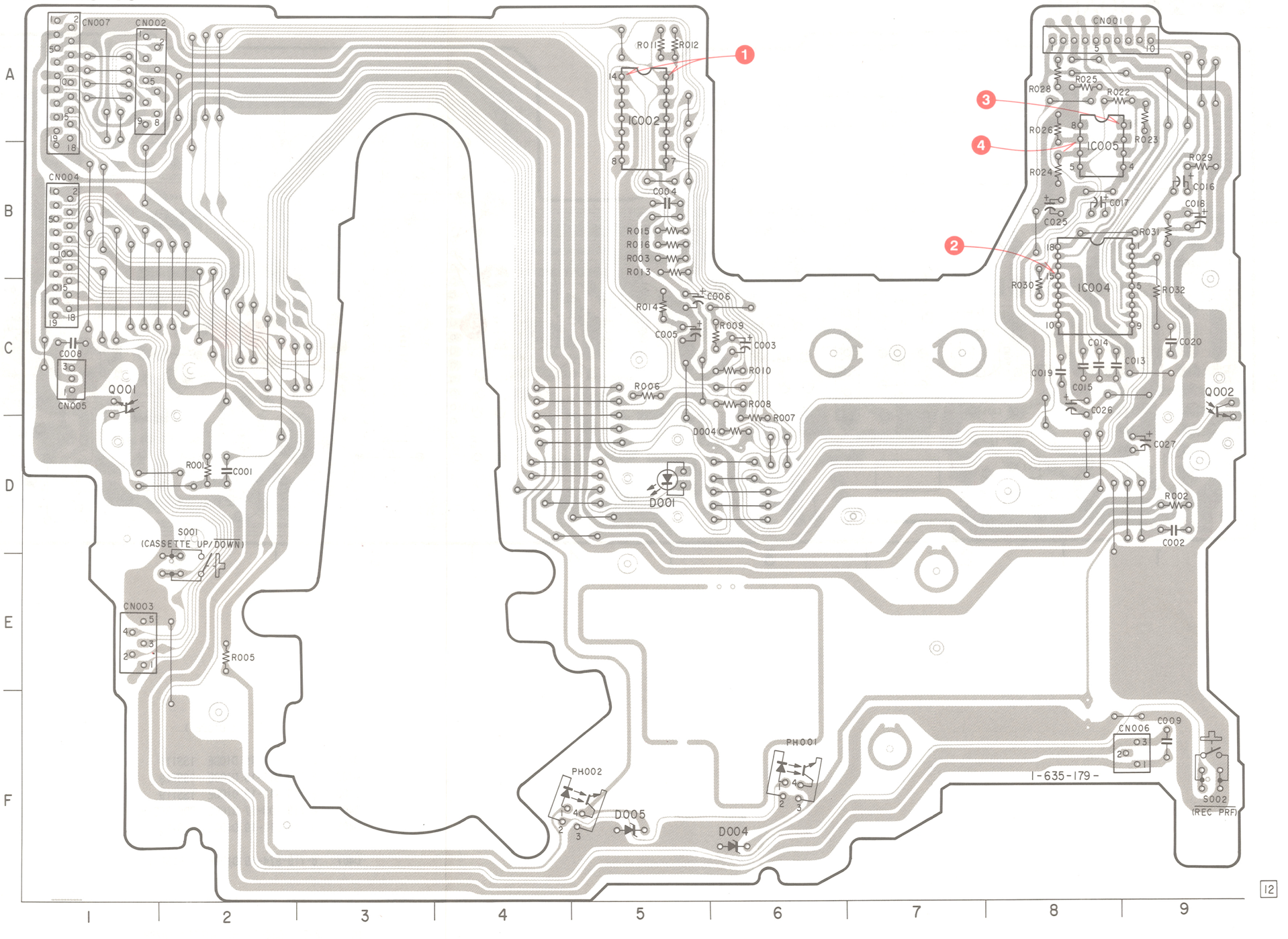

— Ref. No. MD-40 BOARD: 2000 series —

MD-40 BOARD

no mark:REC/PB mode
*:Can not be measured

IC002 WAVE SHAPER
IC002 XRA10324

IC004 DRUM MOTOR DRIVE, FG/PG DETECT
IC004 AN3814K

IC005 FG/PG SEP
IC005 XRA10393

Q001 TAKE-UP END SENSOR
Q002 SUPPLY END SENSOR
PH001 TAKE-UP REEL SENSOR
PH002 SUPPLY REEL SENSOR

(TAPE TOP/END) B001
(CASEETTE UP/DOWN) S001
(REC PROOF) S002

CAPSTAN MOTOR (M902)
IC001 CAP MOTOR DRIVER
HALL DEVICE
RM001 FG

1	MTR 12V
2	C.VS
3	CAP RVS
4	SW 5V
5	GND (SW)
6	CAP FG2
7	CAP FG1
8	GND (MTR)
9	LIMITER

DRUM MOTOR (M901)

1	M2
2	VCC
3	HE (+)
4	M3
5	N.C.
6	GND (SW)
7	MTR 12V
8	N.C.
9	HE (-)
10	M1

CN002 9P WHT

MTR 12V	1
C VS	2
C RVS	3
SW 5V	4
GND (SW)	5
FG 2	6
FG 1	7
GND (MTR)	8
LIMIT	9

CN001 10P WHT

M2	1
VCC	2
HE (+)	3
M3	4
N.C.	5
GND (SW)	6
MTR 12V	7
N.C.	8
HE (-)	9
M1	10

09

16 17 18 19 20 21 22

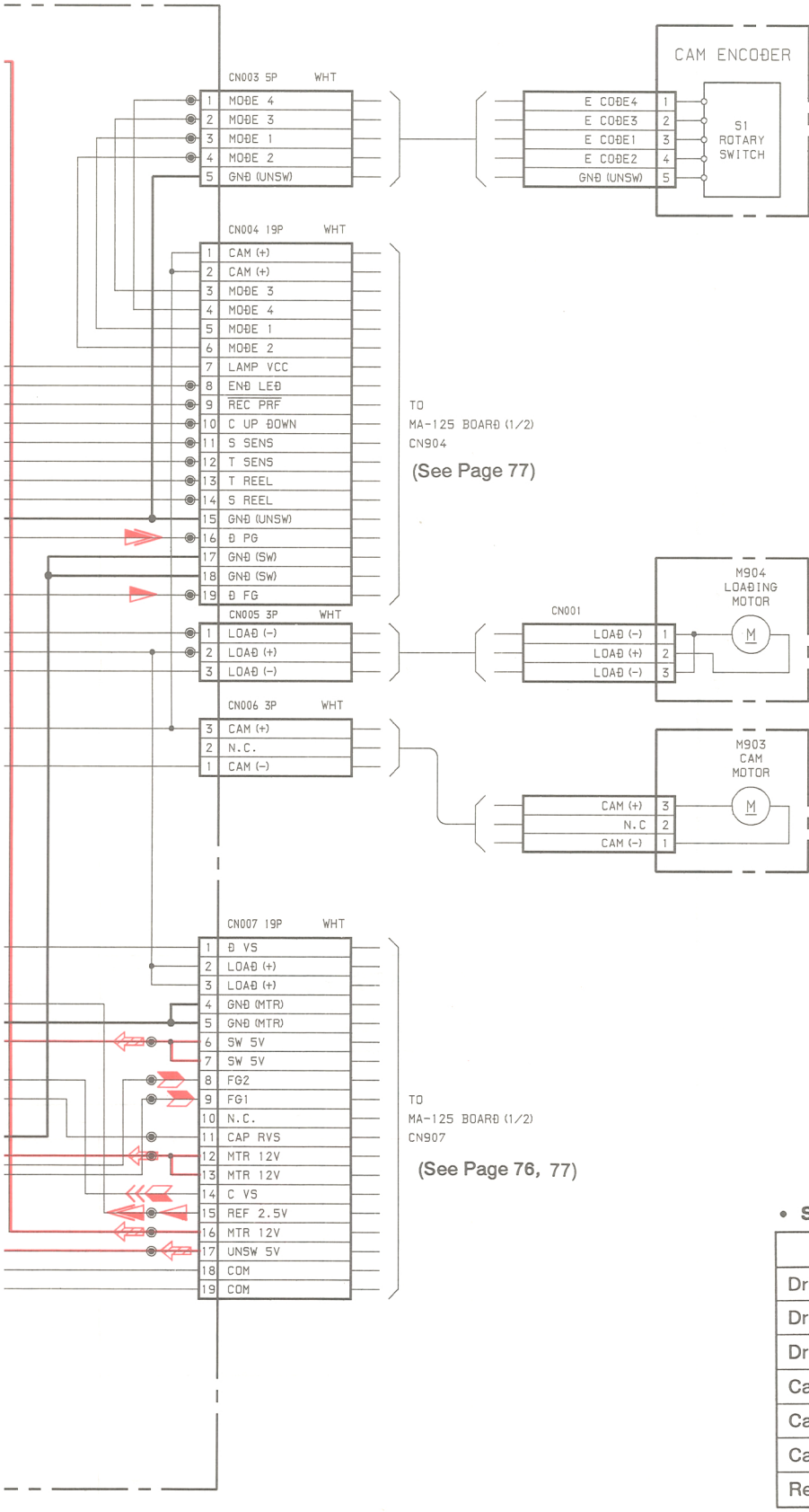

MD-40 BOARD

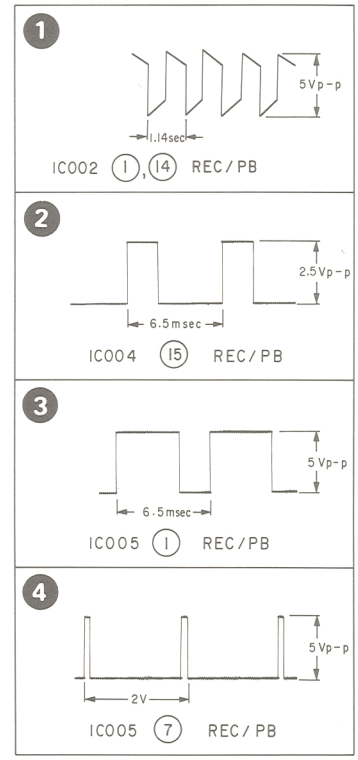

Note: The components identified by mark ⚠ or dotted line with mark ⚠ are critical for safty. Replace only with part number specified.

- **SIGNAL PATH**

	REC	REC/PB	PB
Drum speed servo		▷	
Drum phase servo		▷	
Drum servo (speed and phase)		▷	
Capstan speed servo		▷	
Capstan phase servo			
Capstan servo (speed and phase)		▷	
Ref. signal			

MF-151 (TIMER, TUNER MODE CONTROL), MF-152 (FUNCTION SWITCH) SCHEMATIC DIAGRAMS

— Ref. No. MF-151 BOARD: 3000 series, MF-152 BOARD: 4000 series —

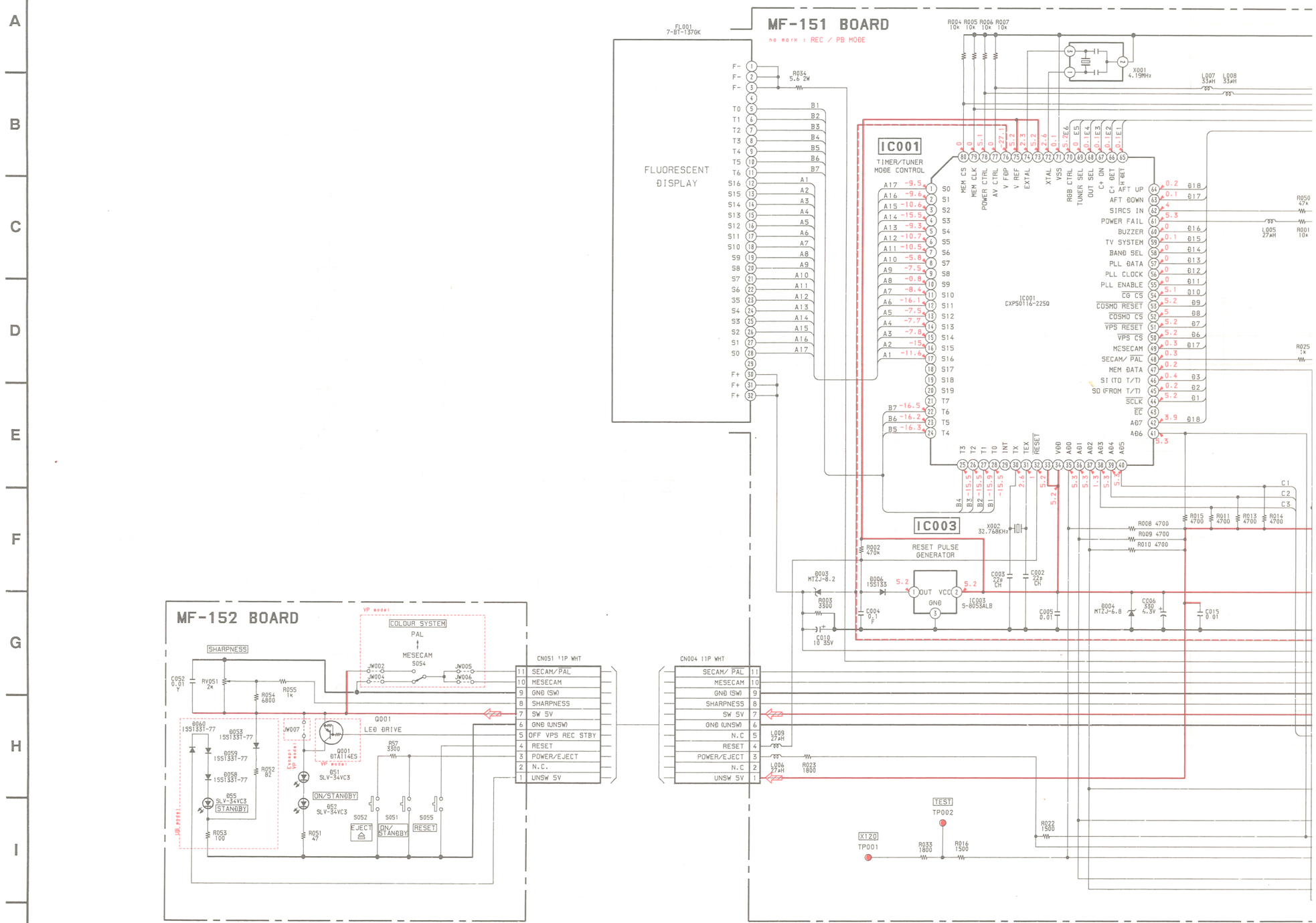

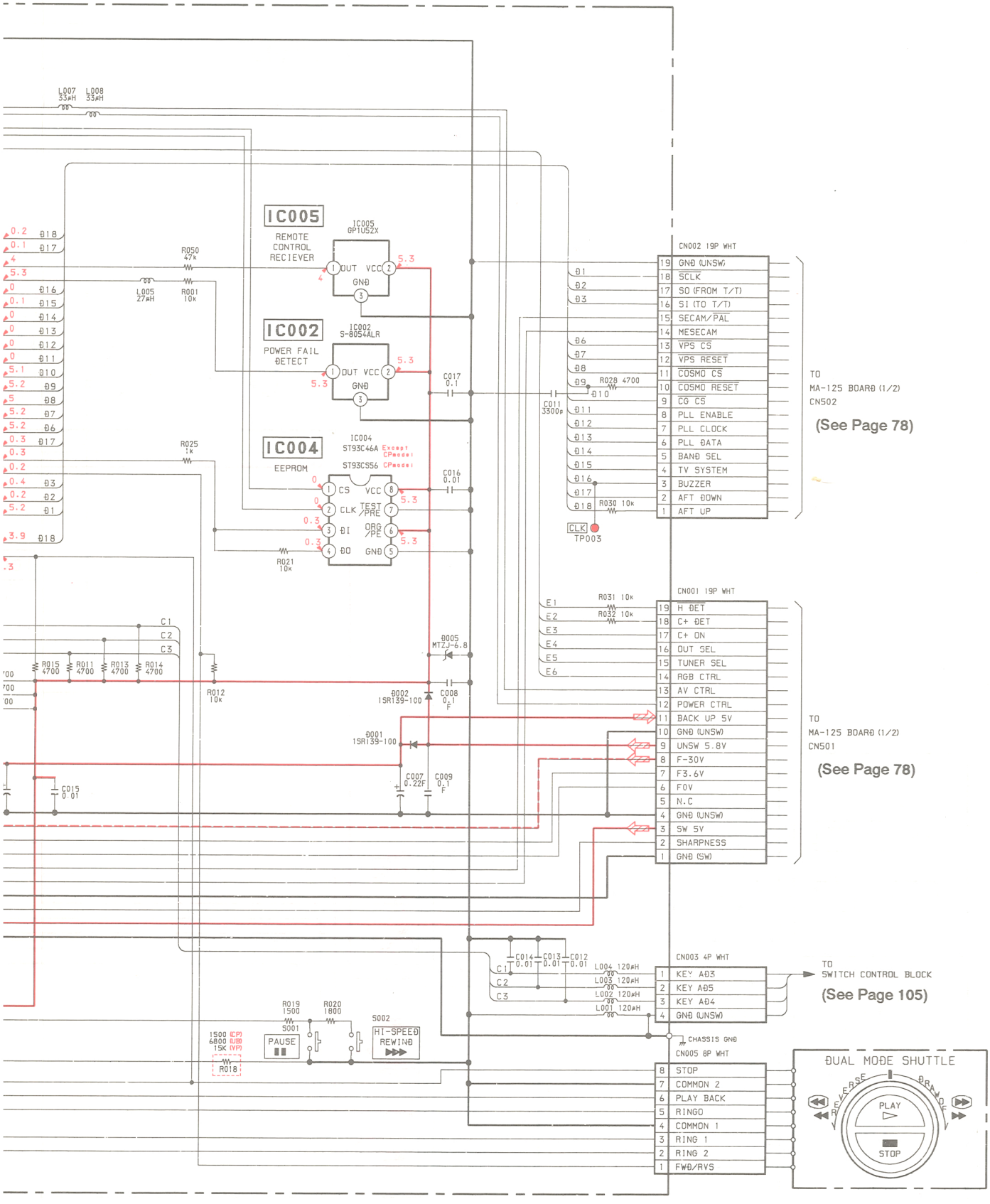
IC005
REMOTE CONTROL RECIEVER
IC005 GP1U52X
IC002
POWER FAIL ĐETECT
IC002 S-80054ALR
IC004
EEPROM
IC004 ST93C46A Except CPmodel
ST93C56 CPmodel
CN002 19P WHT
GNĐ (UNSW)
SCLK
SO (FROM T/T)
SI (TO T/T)
SECAM/PAL
MESECAM
VPS CS
VPS RESET
COSMO CS
COSMO RESET
CG CS
PLL ENABLE
PLL CLOCK
PLL ĐATA
BANĐ SEL
TV SYSTEM
BUZZER
AFT ĐOWN
AFT UP
TO MA-125 BOARĐ (1/2) CN502
(See Page 78)
CN001 19P WHT
H ĐET
C+ ĐET
C+ ON
OUT SEL
TUNER SEL
RGB CTRL
AV CTRL
POWER CTRL
BACK UP 5V
GNĐ (UNSW)
UNSW 5.8V
F-30V
F3.6V
FOV
N.C
GNĐ (UNSW)
SW 5V
SHARPNESS
GNĐ (SW)
TO MA-125 BOARĐ (1/2) CN501
(See Page 78)
CN003 4P WHT
KEY AĐ3
KEY AĐ5
KEY AĐ4
GNĐ (UNSW)
TO SWITCH CONTROL BLOCK
(See Page 105)
CHASSIS GNĐ
CN005 8P WHT
STOP
COMMON 2
PLAY BACK
RINGO
COMMON 1
RING 1
RING 2
FWĐ/RVS
ĐUAL MOĐE SHUTTLE
REVERSE
BRAKE
PLAY
STOP
PAUSE
HI-SPEEĐ REWINĐ
TP003

MF-151 (TIMER, TUNER MODE CONTROL), MF-152 (FUNCTION SWITCH) PRINTED WIRING BOARDS

— Ref. No. MF-151 BOARD: 3000 series, MF-152 BOARD: 4000 series —

MF-151 BOARD

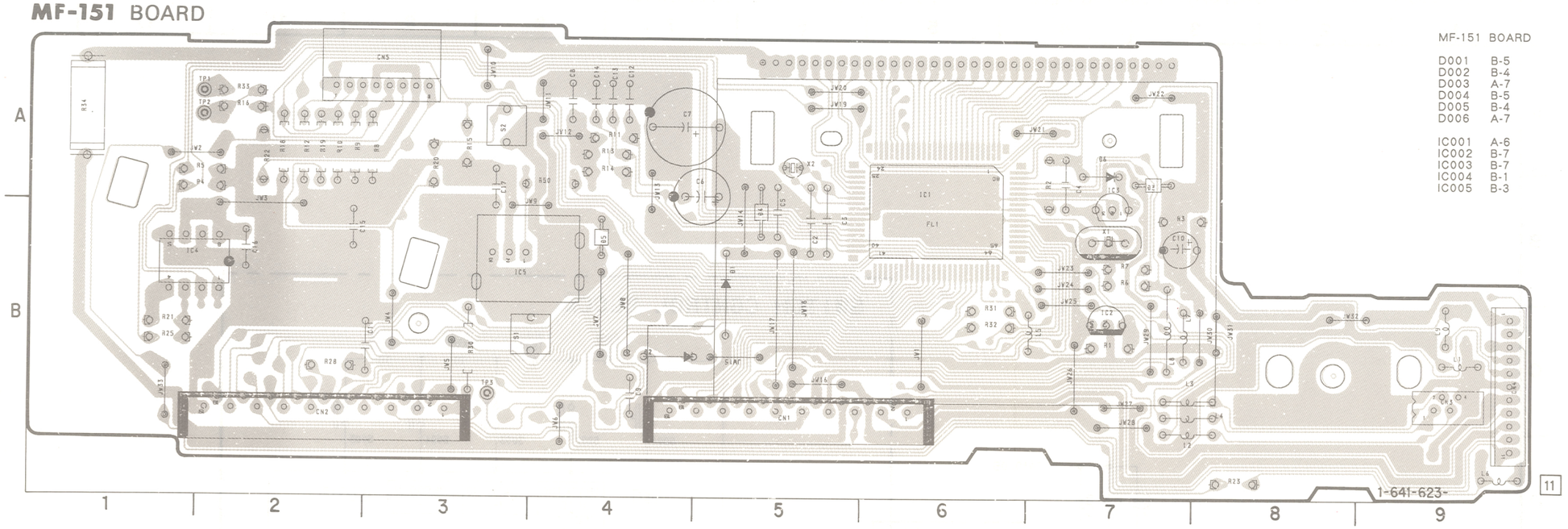

MF-151 BOARD

D001	B-5
D002	B-4
D003	A-7
D004	B-5
D005	B-4
D006	A-7
IC001	A-6
IC002	B-7
IC003	B-7
IC004	B-1
IC005	B-3

〈 DIODE 〉

D001	8-719-974-59	DIODE	1SR139-100
D002	8-719-974-59	DIODE	1SR139-100
D003	8-719-110-08	DIODE	RD8.2ES-B2
D004	8-719-109-97	DIODE	RD6.8ES-B2
D005	8-719-109-97	DIODE	RD6.8ES-B2
D006	8-719-987-06	DIODE	WG713A
D006	8-719-911-19	DIODE	1SS119

〈 IC 〉

IC001	8-752-832-89	IC	CXP50116-270Q
IC002	8-759-505-83	IC	S-8054ALR-Z
IC003	8-759-941-78	IC	S-8053ALB
IC004	8-759-501-99	IC	ST93C46AB1
IC005	1-466-131-21	IC	GP1U52X

MF-152 BOARD

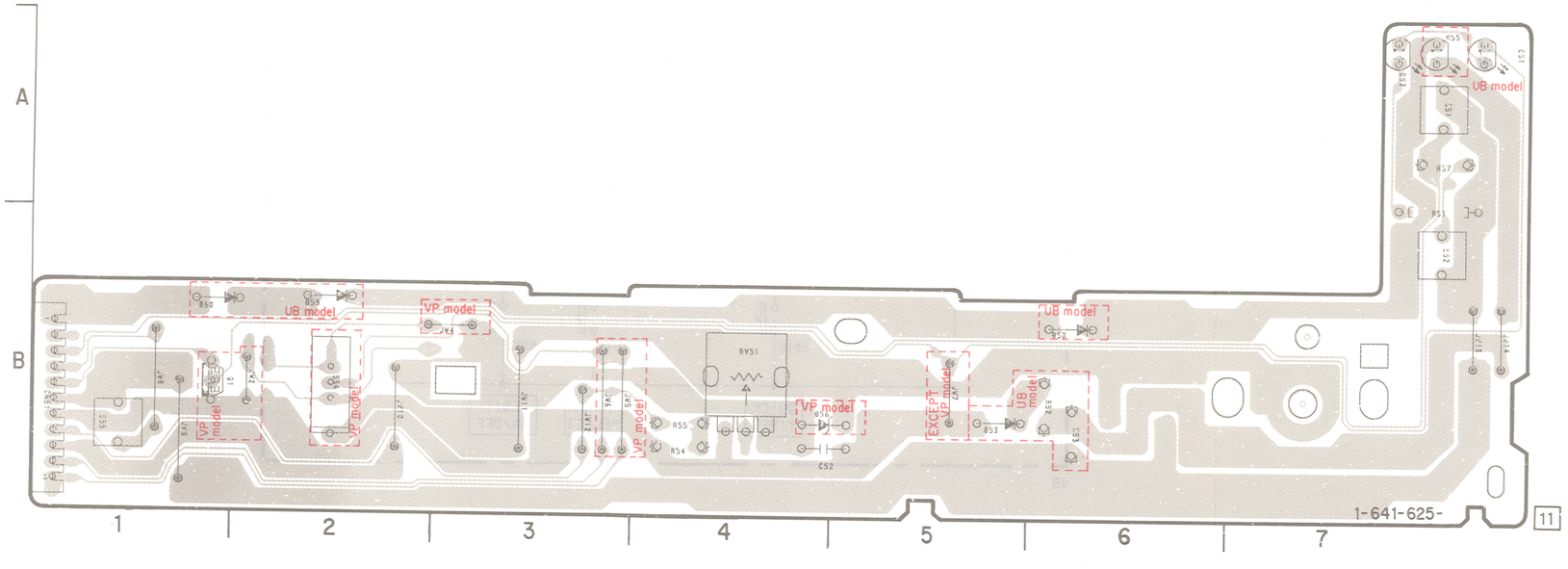

MF-152 BOARD

D051	A-7
D052	A-7
D053	B-5
D055	A-7
D056	B-4
D058	A-6
D059	A-2
D060	A-1
Q001	B-1

〈 DIODE 〉

D051	8-719-970-67	DIODE	SLR-34MC80F215
D052	8-719-970-67	DIODE	SLR-34MC80F215
D053	8-719-911-19	DIODE	1SS133T (UB MODEL)
D055	8-719-940-99	DIODE	SLV-34VC3 (UB MODEL)
D058	8-719-911-19	DIODE	1SS133T (UB MODEL)
D059	8-719-911-19	DIODE	1SS133T (UB MODEL)
D060	8-719-911-19	DIODE	1SS133T (UB MODEL)

SWITCH BLOCK (FUNCTION SWITCH) SCHEMATIC DIAGRAM

Note: Switch control block is replaced as a block.

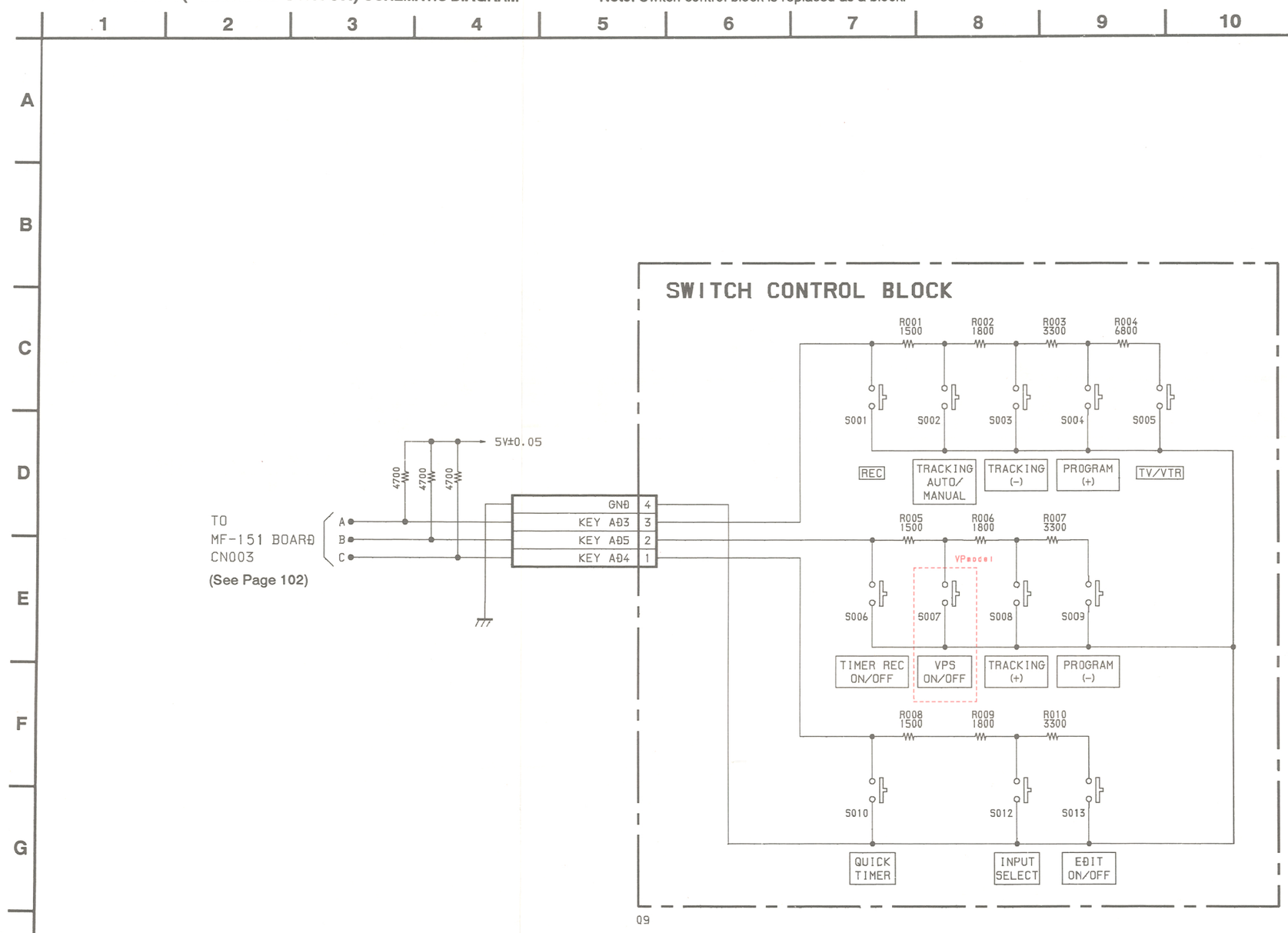

POWER BLOCK (POWER SUPPLY) PRINTED WIRING BOARD

— Ref. No. POWER BLOCK: 9000 series —

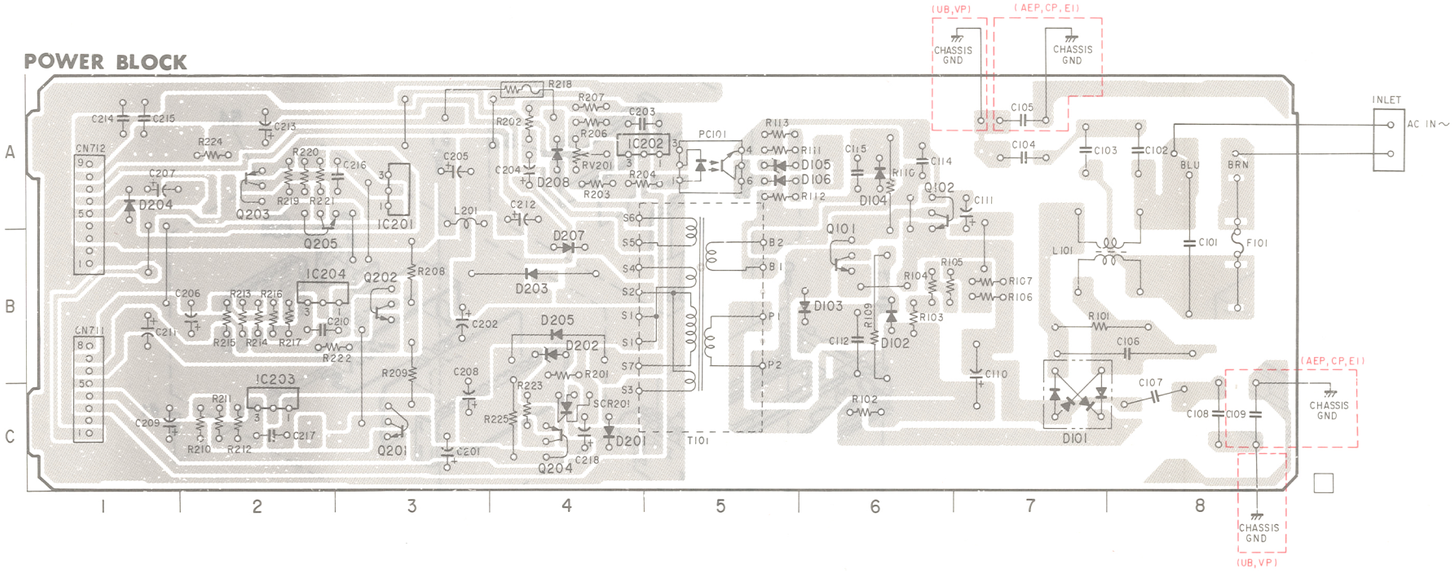

POWER BLOCK

D101	C-7
D102	B-6
D103	B-6
D104	A-6
D105	A-5
D106	A-5
D201	C-4
D202	B-4
D203	B-4
D204	A-1
D205	B-4
D207	B-4
D208	A-4
IC201	A-3
IC202	A-5
IC203	C-2
IC204	B-2
PC101	A-5
Q101	B-6
Q102	A-6
Q201	C-3
Q202	B-3
Q203	A-2
Q204	C-4
Q205	A-2
SCR201	C-4

〈 DIODE 〉

D101	9-900-511-01	DIODE	S1WBA60
D102	8-719-948-45	DIODE	ERA22-08
D103	8-719-948-45	DIODE	ERA22-08
D104	8-719-200-82	DIODE	11ES2
D105	8-719-109-63	DIODE	RD3.0EB2
D106	8-719-911-19	DIODE	1SS119
D201	9-900-534-01	DIODE	ERA18-02
D202	8-719-114-55	DIODE	RD9.1JSB
D203	8-719-311-30	DIODE	RL4Z
D204	9-998-861-01	DIODE	ERA83-004
D205	8-719-981-00	DIODE	ERC81-004
D207	9-900-534-01	DIODE	ERA18-02
D208	9-998-861-01	DIODE	ERA83-004

〈 IC 〉

IC201	9-900-530-01	IC	AN7809F
IC202	8-759-420-19	IC	AN1431T
IC203	8-759-420-19	IC	AN1431T
IC204	8-759-420-19	IC	AN1431T

〈 TRANSISTOR 〉

Q101	8-729-204-94	TRANSISTOR	2SC3559
Q102	8-729-142-46	TRANSISTOR	2SC2001-L
Q201	9-901-973-01	TRANSISTOR	2SC4545
Q202	9-901-973-01	TRANSISTOR	2SC4545
Q203	8-729-993-42	TRANSISTOR	2SA934-Q
Q204	8-729-201-53	TRANSISTOR	2SA1015-GR
Q205	8-729-900-80	TRANSISTOR	DTC114ES

POWER BLOCK (POWER SUPPLY) SCHEMATIC DIAGRAM

— Ref. No. POWER BLOCK: 9000 series —

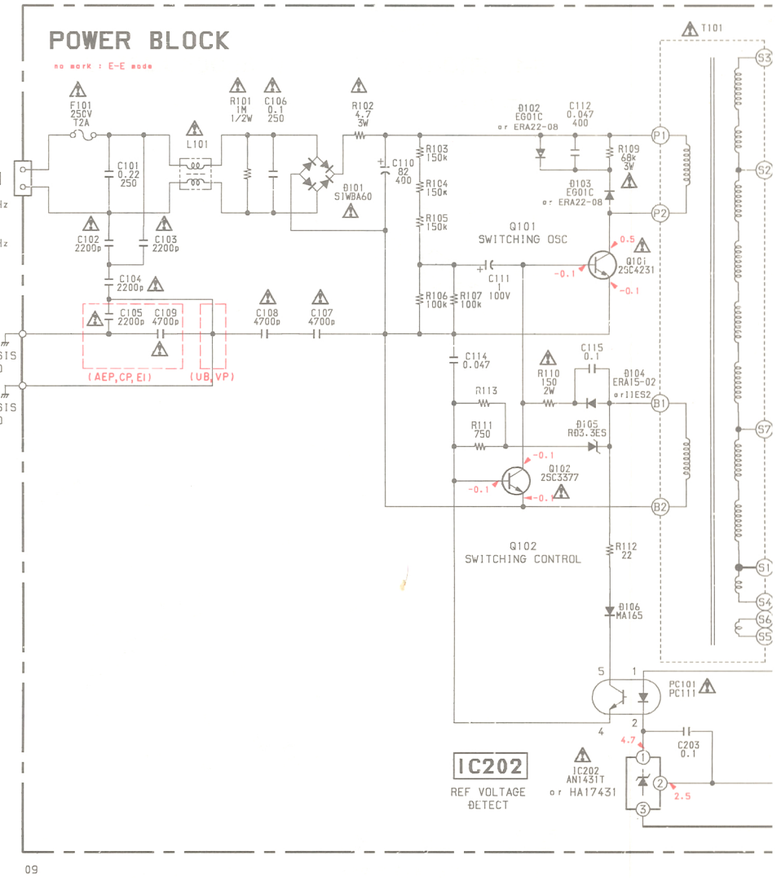

Note: The components identified by mark ⚠ or dotted line with mark ⚠ are critical for safty.
Replace only with part number specified.

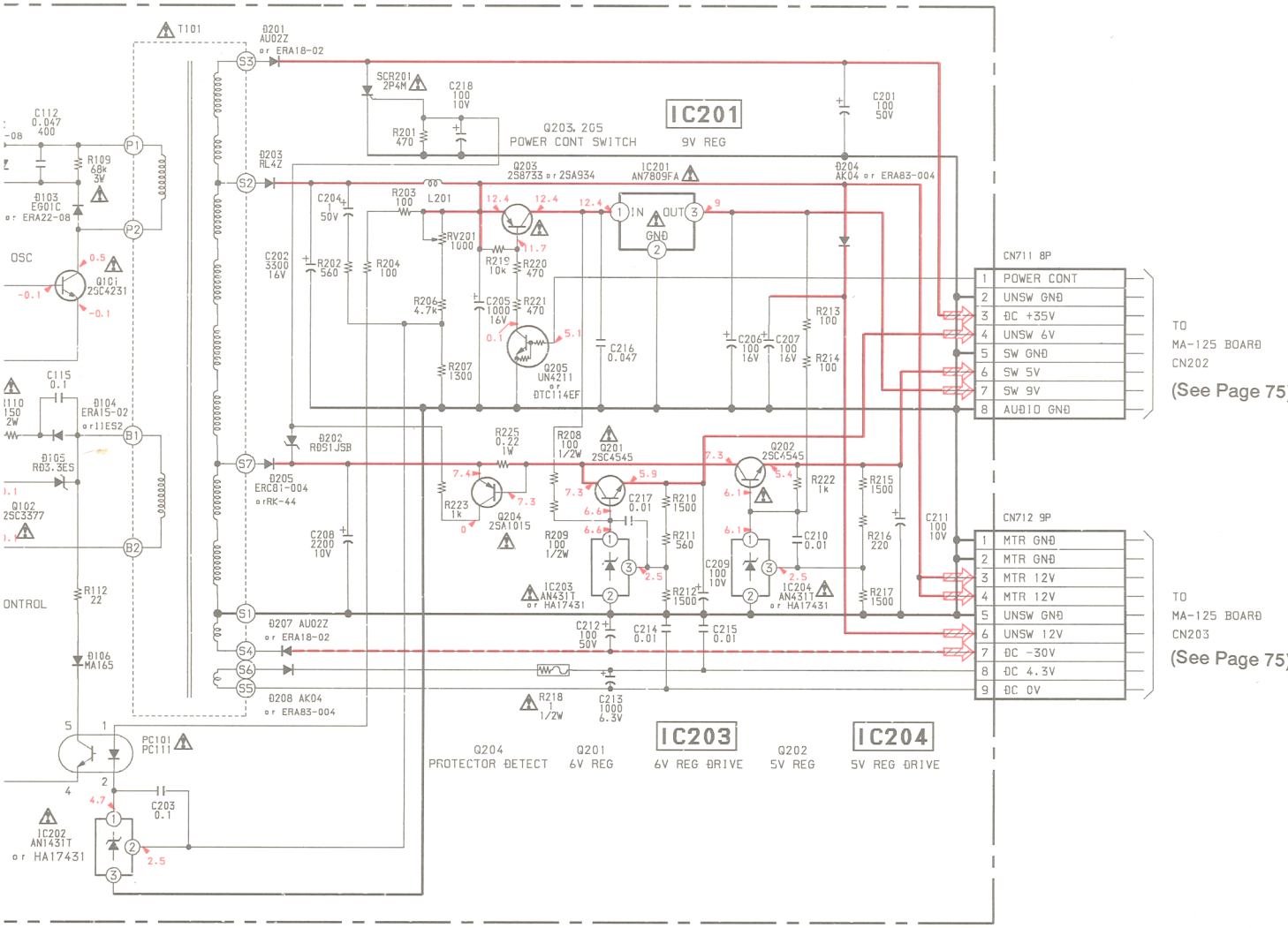
5
6
7
8
9
10
11
12
T101
D201 AU02Z or ERA18-02
SCR201 2P4M
C218 100 10V
R201 470
Q203, 205 POWER CONT SWITCH
IC201
9V REG
C201 100 50V
D203 RL4Z
Q203 2SB733 or 2SA934
IC201 AN7809FA
D204 AK04 or ERA83-004
C204 1 50V
R203 100
L201
RV201 1000
R219 10k
R220 470
C202 3300 16V
R202 560
R204 100
R206 4.7k
C205 1000 16V
R221 470
Q205 UN4211 or DTC114EF
C216 0.047
R207 1300
C206 100 16V
C207 100 16V
R213 100
R214 100
C112 0.047 400
R109 68k 2W
D103 EG01C or ERA22-08
OSC
Q101 2SC4231
C115 0.1
D104 ERA15-02 or 1ES2
D105 RD3.3ES
Q102 2SC3377
R112 22
ONTROL
D106 MA165
D202 RD51JSB
D205 ERC01-004 or RK-44
R225 0.22 1W
R208 100 1/2W
Q201 2SC4545
R223 1k
Q204 2SA1015
R209 100 1/2W
C217 0.01
R210 1500
R211 560
R212 1500
C208 2200 10V
IC203 AN431T or HA17431
C212 100 50V
C214 0.01
C215 0.01
R218 1 1/2W
C213 1000 6.3V
Q202 2SC4545
R222 1k
R215 1500
C210 0.01
R216 220
C209 100 10V
IC204 AN431T or HA17431
R217 1500
C211 100 10V
D207 AU02Z or ERA18-02
D208 AK04 or ERA83-004
PC101 PC111
C203 0.1
IC202 AN1431T or HA17431
Q204 PROTECTOR DETECT
Q201 6V REG
IC203 6V REG DRIVE
Q202 5V REG
IC204 5V REG DRIVE
CN711 8P
1 POWER CONT
2 UNSW GND
3 DC +35V
4 UNSW 6V
5 SW GND
6 SW 5V
7 SW 9V
8 AUDIO GND
TO MA-125 BOARD CN202
(See Page 75)
CN712 9P
1 MTR GND
2 MTR GND
3 MTR 12V
4 MTR 12V
5 UNSW GND
6 UNSW 12V
7 DC -30V
8 DC 4.3V
9 DC 0V
TO MA-125 BOARD CN203
(See Page 75)

4-3. SEMICONDUCTORS

BA6238A

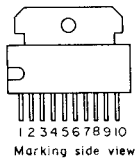

CXP50116-270Q

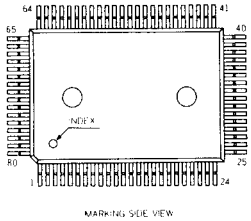

CXP80624-209Q

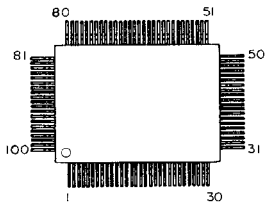

LA7297

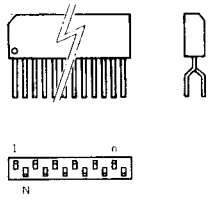

S-8053ALB
S-8054ALR

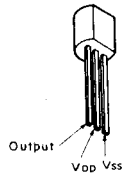

TL082CP

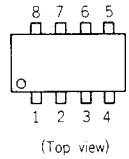

2SA933S-QR

2SC1740S
DTC114ES
DTC144ES

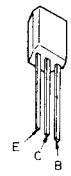

2SC2785-HFE
DTA143XS
DTC114TS

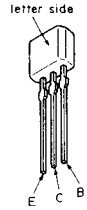

2SD1312-K

PT483F1S

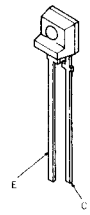

1SS119
1SS133
1SR139-100
RD5.1ES-B2
RD6.8ES-B2
RD8.2ES-B2
RD33ES-B2

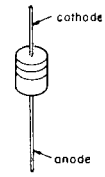

GL451V

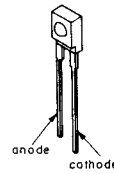

SLR-34MC3
SLV-34VC3

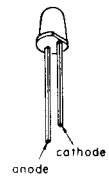

SECTION 5
EXPLODED VIEWS

NOTE:
- -XX, -X mean standardized parts, so they may have some difference from the original one.
- Items marked " * " are not stocked since they are seldom required for routine service. Some delay should be anticipated when ordering these items.
- The mechanical parts with no reference number in the exploded views are not supplied.
- Hardware (# mark) list is given in the last of this parts list.

The components identified by mark ⚠ or dotted line with mark ⚠ are critical for safety.
Replace only with part number specified.

5-1. FRONT PANEL, CASE BLOCK ASSEMBLIES

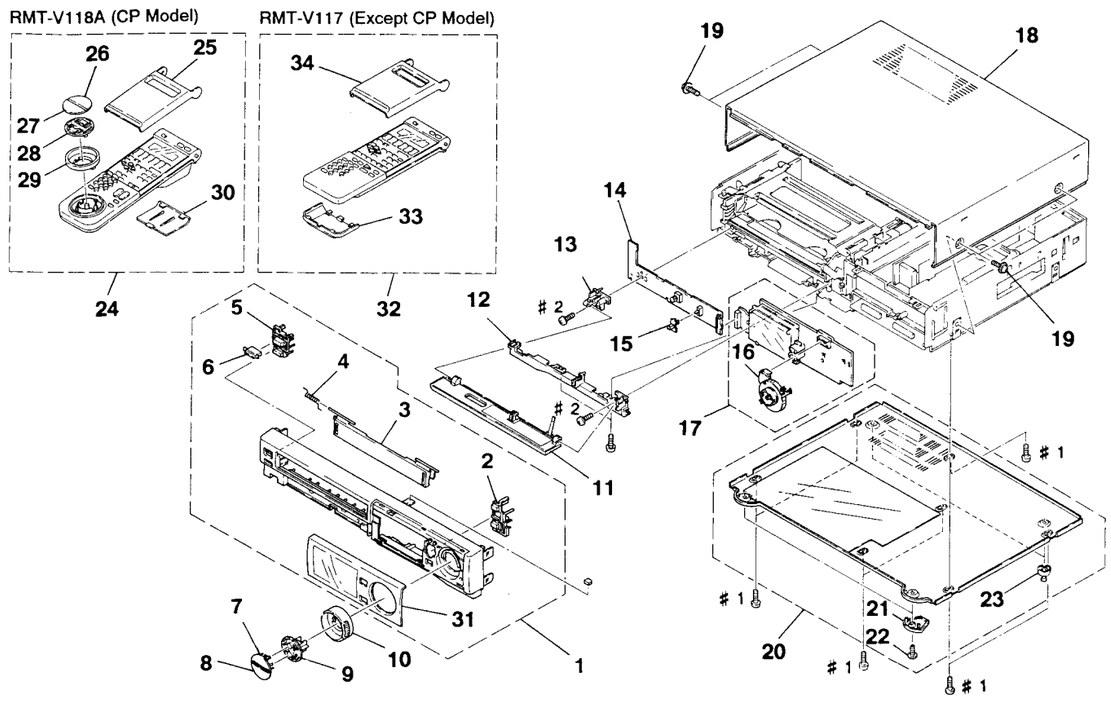

Ref. No.	Part No.	Description	Remark
1	X-3941-233-2	PANEL ASSY, FRONT (VP MODEL)	
1	X-3941-106-2	PANEL ASSY, FRONT (AEP/UB/EI/CP MODEL)	
2	3-941-521-01	BUTTON, PAUSE	
3	3-945-096-11	DOOR, CASSETTE	
4	3-941-520-01	SPRING, FL	
5	3-941-517-11	BUTTON, POWER-EJECT	
6	3-941-518-01	TIP, POWER BUTTON	
7	3-941-510-11	BUTTON, PLAYBACK	
8	3-941-511-11	BUTTON, STOP	
9	3-941-515-01	HOLDER, BUTTON	
10	3-943-988-01	RING, SHUTTLE	
11	1-466-497-81	SWITCH BLOCK, CONTROL (VP MODEL)	
11	1-466-497-71	SWITCH BLOCK, CONTROL (AEP/UB/EI MODEL)	
11	1-466-497-91	SWITCH BLOCK, CONTROL (CP MODEL)	
12	X-3940-667-1	ESCUTCHEON ASSY, FRAME	
13	3-941-537-01	PLATE (LEFT), FULCRUM, DOOR	
* 14	A-6754-409-A	MF-152 BOARD, COMPLETE (AEP/VP/CP MODEL)	
* 14	A-6754-410-A	MF-152 BOAR, COMPLETE (AEP/CP/EI MODEL)	
* 14	A-6754-408-A	MF-152 BOAR, COMPLETE (UB MODEL)	
15	3-744-217-01	KNOB, SELECTION (VP MODEL)	
16	1-572-662-11	SWITCH, ROTARY	
* 17	A-6721-449-A	MF-151 BOARD, COMPLETE	
18	3-741-985-01	CASE, UPPER	
19	3-710-901-11	SCREW (TP3X8), CASE	
20	X-3940-317-1	PLATE ASSY, BOTTOM	
21	3-941-509-01	INSULATOR	
22	3-721-343-01	SCREW, FIXED, M4X7	
23	3-670-155-11	LEG	
24	1-465-724-41	REMOTE COMMANDER (RMT-V118A)	
25	3-947-723-01	COVER, TIMER	
26	3-941-617-01	BUTTON, PLAYBACK	
27	3-941-618-01	BUTTON, STOP	
28	3-941-619-01	HOLDER, DIAL	
29	3-941-616-01	RING, SHUTTLE	
31	3-941-523-62	PLATE, TRANSPARENT	
32	1-465-739-21	REMOTE COMMANDER (RMT-V117)	
33	2-181-766-01	COVER, BATTERY	
34	3-947-722-01	COVER, TIMER	

5-2. POWER SUPPLY BLOCK ASSEMBLY

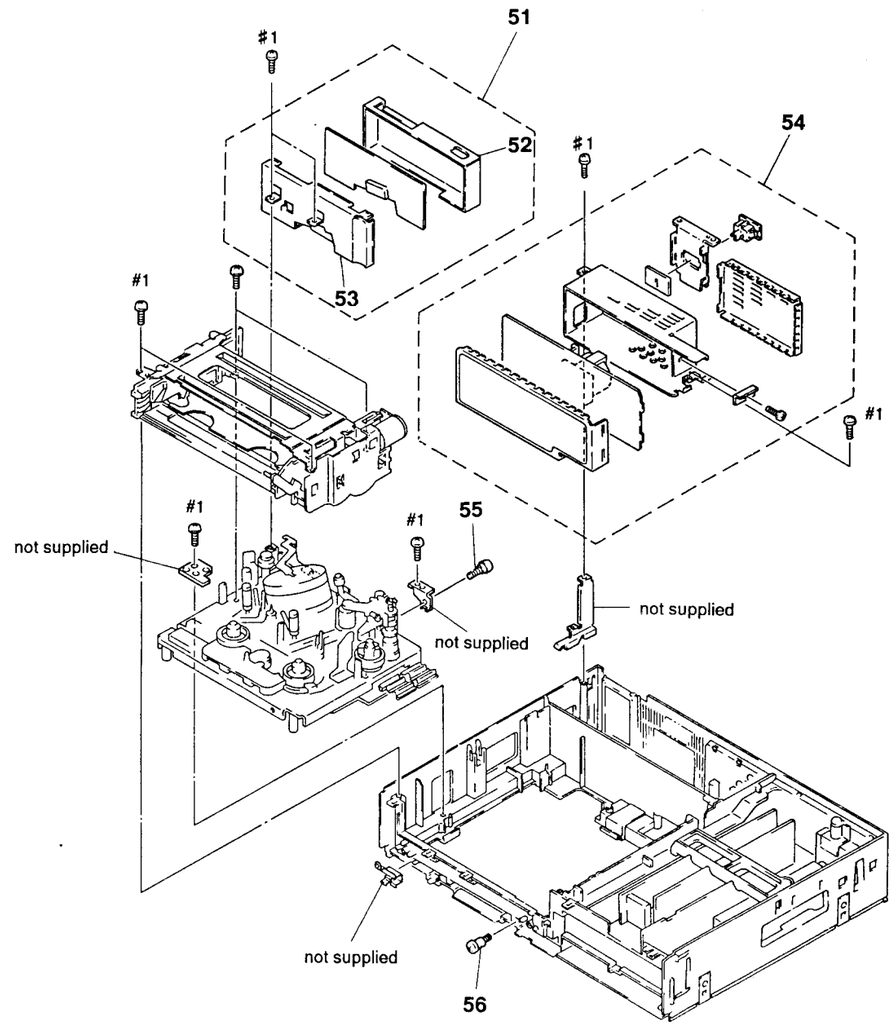

The components identified by mark ⚠ or dotted line with mark ⚠ are critical for safety.
Replace only with part number specified.

Ref. No.	Part No.	Description	Remark
51	A-6727-327-A	RP-100 BOARD, COMPLETE	
* 52	3-746-014-01	CASE (MAIN), GRP	
* 53	3-746-015-01	CASE (UPPER), GRP	
⚠54	1-413-636-11	POWER BLOCK (VP/EI MODEL)	
⚠54	1-413-635-11	POWER BLOCK (UB MODEL)	
⚠54	1-413-637-11	POWER BLOCK (AEP/CP MODEL)	
55	3-736-055-01	SCREW (3X8), TAPPING	
56	3-741-948-01	SCREW (3), SPECIAL (+) TAPPING	

5-3. MAIN BOARD BLOCK ASSEMBLY

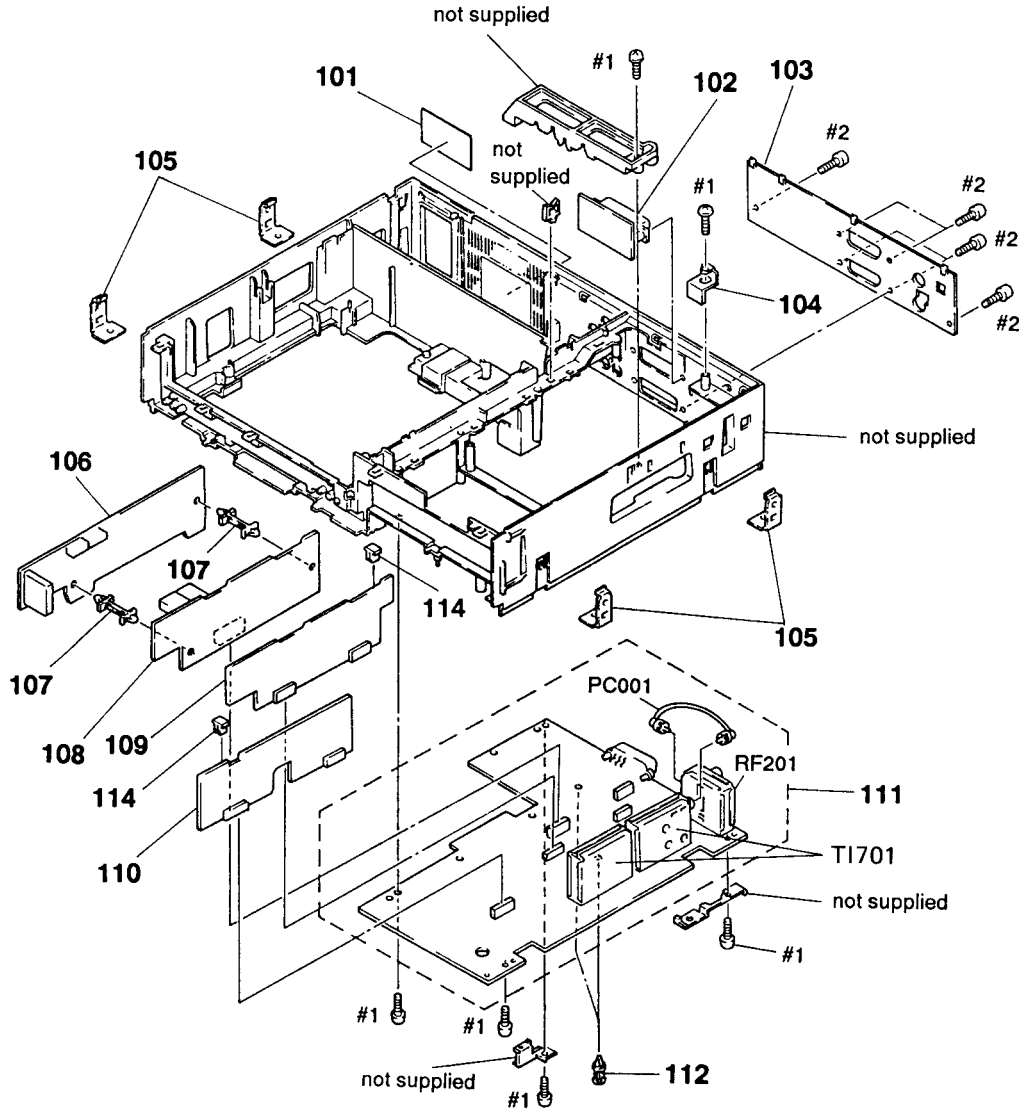

The components identified by mark ⚠ or dotted line with mark ⚠ are critical for safety.
Replace only with part number specified.

Ref. No.	Part No.	Description	Remark
* 101	3-945-333-01	LABEL, MODEL NUMBER (AEP MODEL)	
* 101	3-946-103-01	LABEL, MODEL NUMBER (UB MODEL)	
* 101	3-946-104-01	LABEL, MODEL NUMBER (VP MODEL)	
* 101	3-946-105-01	LABEL, MODEL NUMBER (CP MODEL)	
* 101	3-946-106-01	LABEL, MODEL NUMBER (EI MODEL)	
* 102	A-6754-290-A	CP-53 BOAR, COMPLETE (CP MODEL)	
103	3-942-331-01	PLATE, ORNAMENTAL, JACK(EXCEPT CP MODEL)	
103	3-942-331-21	PLATE, ORNAMENTAL, JACK (CP MODEL)	
* 104	3-741-963-01	BRACKET, RF	
105	3-741-992-01	STOPPER, UPPER CASE	
106	A-6726-326-A	PC-54 BOARD, COMPLETE	
* 107	3-710-673-01	SUPPORT, PC BOARD	
108	A-6726-325-A	YP-11 BOARD, COMPLETE	
109	A-6754-287-A	CP-52 BOAR, COMPLETE (CP MODEL)	
* 110	A-6713-487-A	CV-26 BOARD, COMPLETE (VP MODEL)	

Ref. No.	Part No.	Description	Remark
* 110	A-6713-488-A	CV-26 BOARD, COMPLETE (EXCEPT VP MODEL)	
* 111	A-6756-349-A	MA-125 BOARD, COMPLETE (VP MODEL)	
* 111	A-6756-346-A	MA-125 BOARD, COMPLETE (UB MODEL)	
* 111	A-6756-347-A	MA-125 BOARD, COMPLETE (CP MODEL)	
* 111	A-6756-348-A	MA-125 BOARD, COMPLETE (EI MODEL)	
* 111	A-6756-350-A	MA-125 BOARD, COMPLETE (AEP MODEL)	
112	3-682-057-11	SPACER (SMALL)	
* 113	3-738-240-11	KNOB, PC BOARD	
PC001	1-558-924-21	CABLE, PIN	
⚠RF201	1-466-328-11	MODULATOR, RF (RFU-2017)	
⚠RF201	1-466-347-11	MODULATOR, RF (RFU-2017) (UB/EI MODEL)	
⚠TI701	1-465-744-11	TUNER, VIF (BTF-2U601) (UB MODEL)	
⚠TI701	1-465-745-11	TUNER, VIF (BTF-2U401) (VP MODEL)	
⚠TI701	1-465-746-11	TUNER, VIF (BTF-2U402) (AEP/CP MODEL)	
⚠TI701	1-465-747-11	TUNER, VIF (BTF-2U403) (EI MODEL)	

5-4. FL BLOCK ASSEMBLY

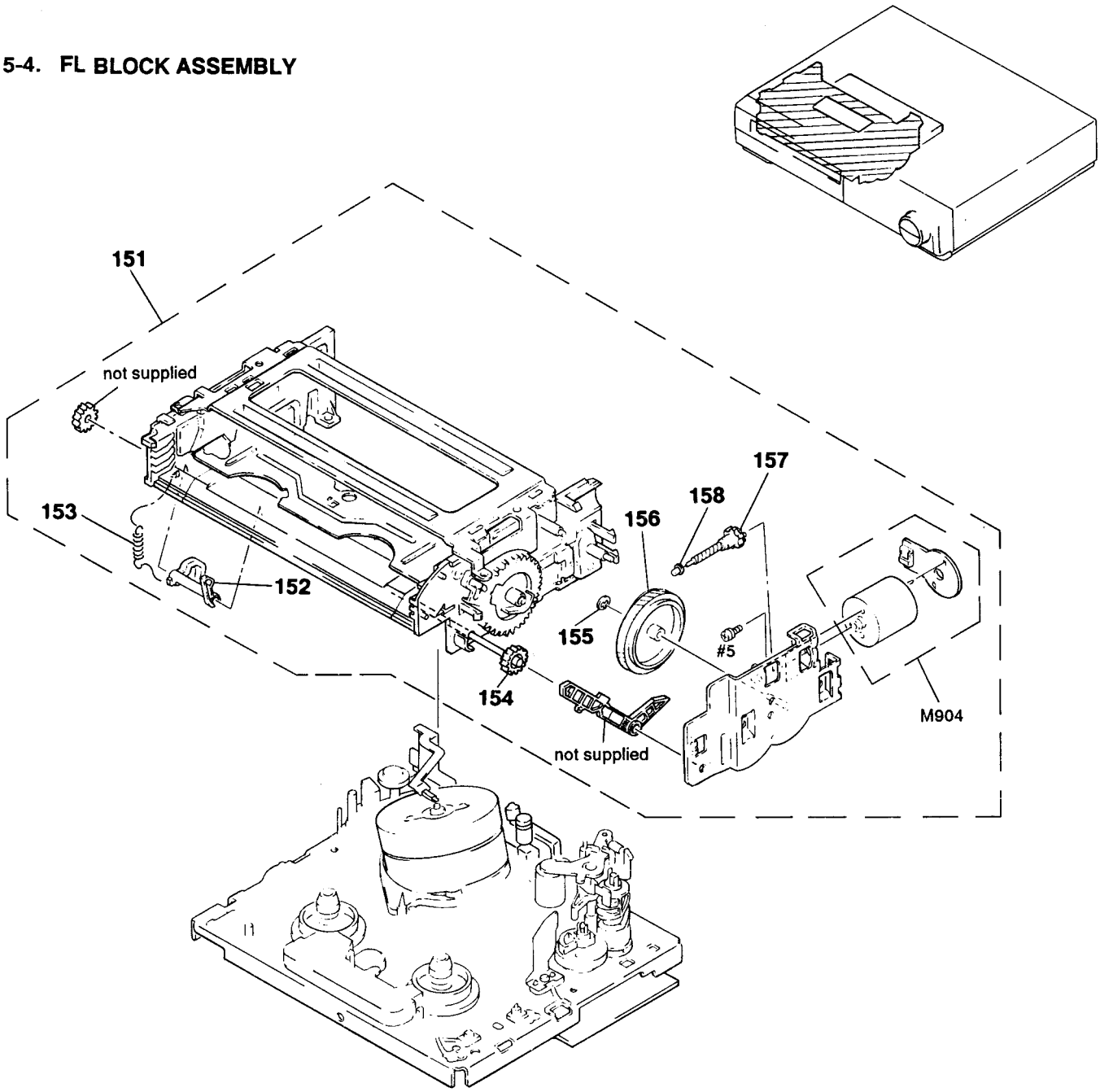

Ref. No.	Part No.	Description	Remark
151	A-6751-445-A	FL BLOCK ASSY (F45)	
152	3-736-163-01	LEVER, ERASING PROTECTION	
153	3-739-687-01	SPRING, TENSION	
154	X-3727-775-2	GEAR (RIGHT) ASSY, MIDWAY	
155	3-696-510-01	WASHER (3), STOPPER	
156	3-736-164-01	WHEEL (FL), WORM	
157	3-736-100-01	GEAR (FL), WORM	
158	3-716-144-02	RETAINER, WORM	
M904	X-3727-784-1	MOTOR ASSY	

5-5. MD CHASSIS ASSEMBLY 1

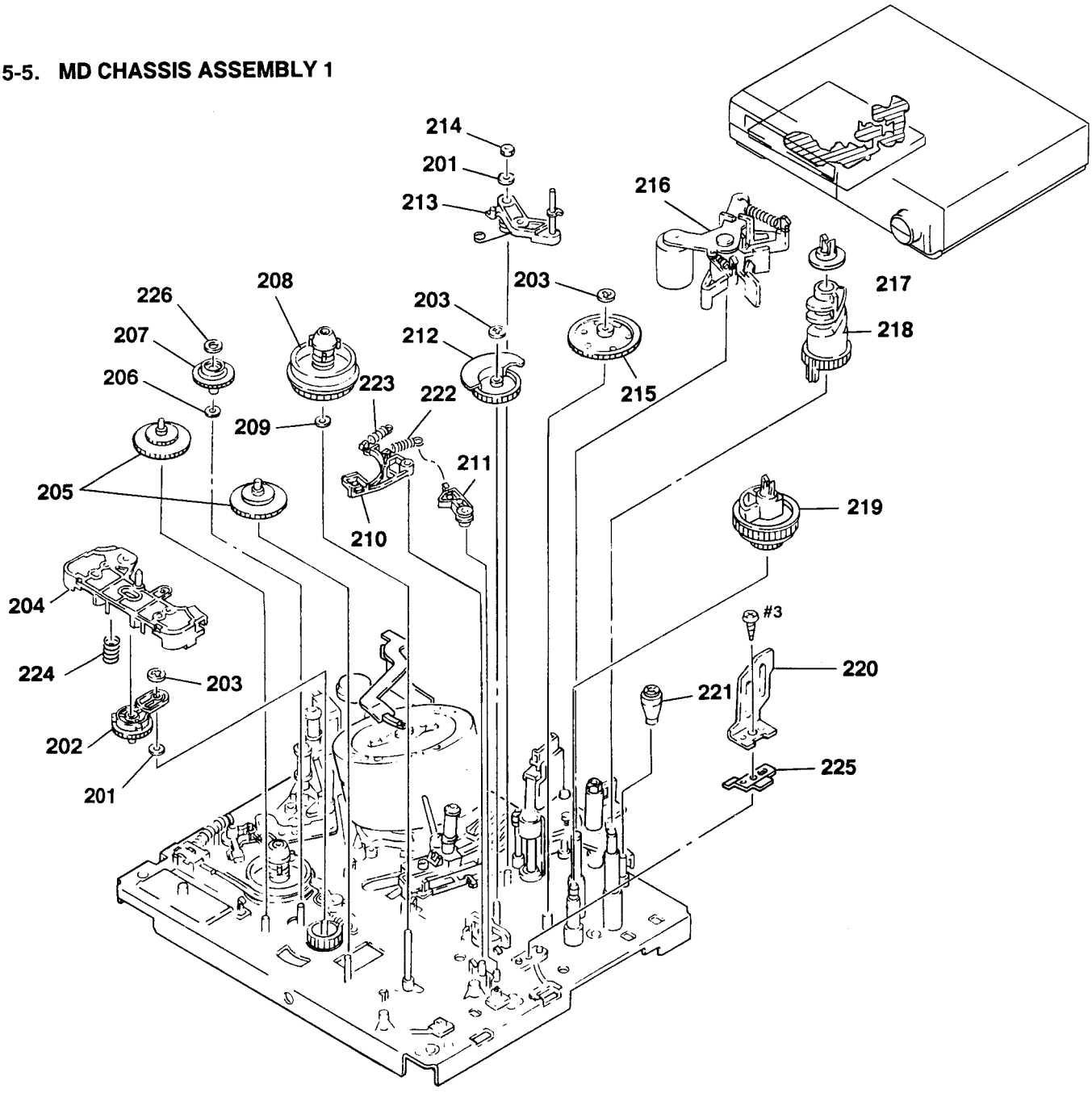

Ref. No.	Part No.	Description	Remark
201	3-701-438-11	WASHER, 2.5	
202	X-3727-776-1	ARM ASSY, PENDULUM	
203	3-669-595-00	WASHER (2), STOPPER	
204	3-736-172-02	RELEASE, LOCK, REEL	
205	X-3727-795-1	GEAR ASSY, RELAY	
206	3-736-074-01	RETAINER (SMALL), THRUST	
207	3-736-037-01	GEAR, REW	
208	X-3727-798-1	TABLE ASSY, REEL	
209	3-738-212-21	RETAINER, THRUST, REEL TABLE	
210	X-3733-335-1	BRAKE ASSY (AT), T SOFT	
211	3-736-105-01	ARM, REV BRAKE	
212	3-736-143-01	GEAR, RVS CAM	
213	X-3729-911-1	ARM ASSY, RVS	
214	3-736-740-01	NUT (M2X0.25), NYLON	

Ref. No.	Part No.	Description	Remark
215	3-736-116-01	GEAR, COMMUNICATION	
216	X-3727-770-1	PINCH ROLLER BLOCK ASSY	
217	3-884-171-00	STOPPER	
218	3-736-136-01	CAM, ELEVATOR	
219	3-943-700-01	GEAR (LO), PRESS CAM	
220	3-942-828-01	OPENNER, LID	
221	3-738-250-01	SCREW, AC ADJUSTMENT	
222	3-736-025-01	SPRING (REV BRAKE), TENSION	
223	3-736-024-01	SPRING, TENSION	
224	3-736-020-11	SPRING, COMPRESSION	
225	3-942-829-01	SPRING (2) (ATOM), GROUND, FL	
226	3-736-069-01	RETAINER, SPRING	

5-6. MD CHASSIS ASSEMBLY 2

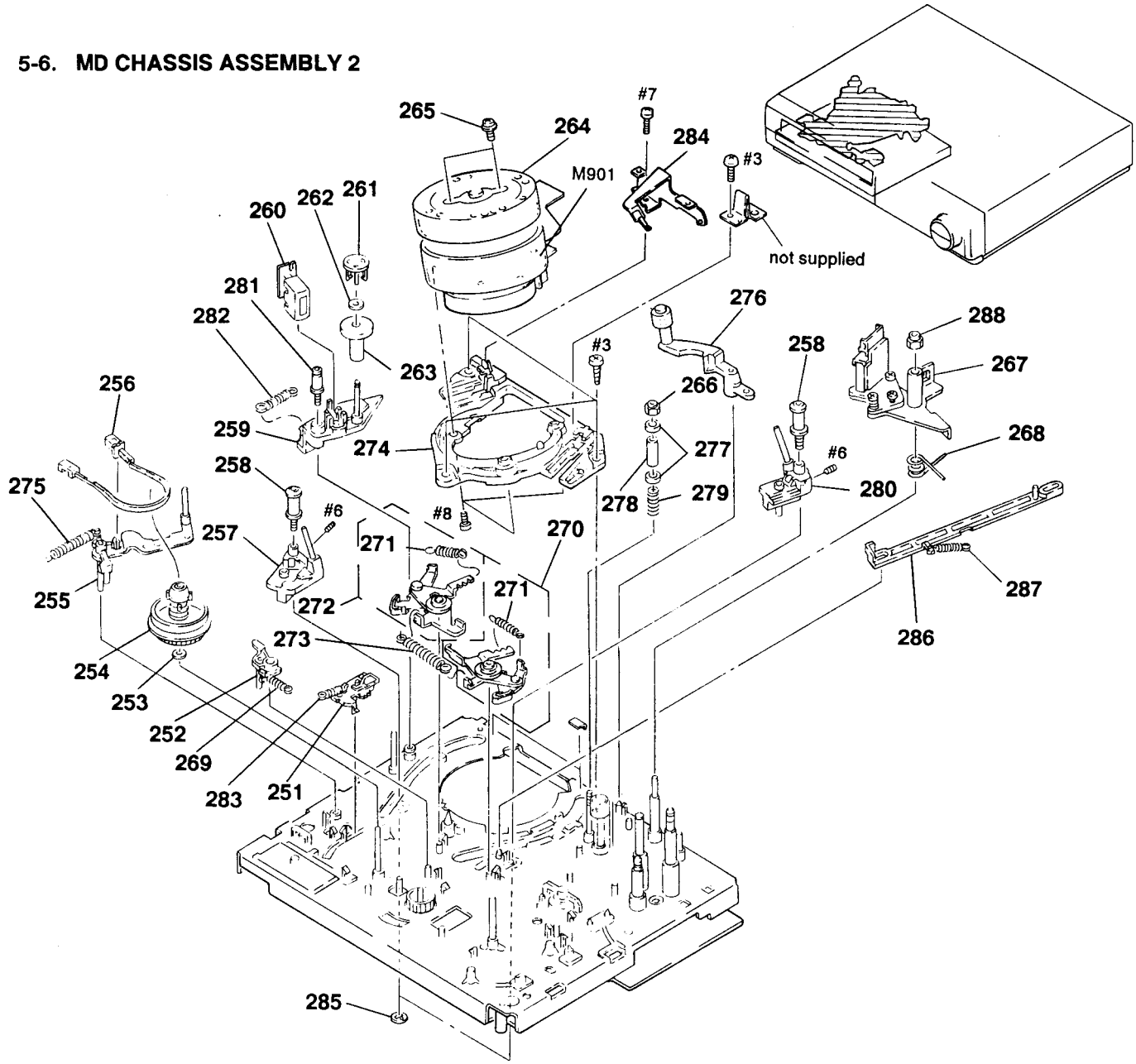

Ref. No.	Part No.	Description	Remark
251	A-6759-483-A	TAKE-UP BLOCK ASSY (AT), S (VP MODEL)	
252	3-736-075-01	BRAKE, S SOFT	
253	3-738-212-21	RETAINER, THRUST, REEL TABLE	
254	X-3941-194-1	TABLE ASSY, REEL, S	
255	3-736-151-11	ARM (POM), TENSION REGULATOR	
256	X-3727-797-1	BAND ASSY, TENSION REGULATOR	
257	X-3727-786-1	SHUTTLE (LEFT) ASSY	
258	X-3733-301-1	ROLLER ASSY, GUIDE	
259	X-3727-767-1	BASE ASSY, STABILIZER	
260	1-543-647-11	HEAD, FE	
261	3-736-082-01	RETAINER, TS THRUST	
262	3-741-925-01	RING, RETAINING	
263	X-3727-771-1	STABLILIZER ASSY, TAPE	
264	1-550-655-11	UPPER DRUM ASSY (DZR-32-R)	
265	2-643-205-01	SCREW (+PSW 3X8)	
266	3-942-866-01	NUT (M3) (3X0.5), NYLON	
267	A-6761-129-A	HEAD BLOCK ASSY, ACE	
268	3-946-148-01	SPRING, TORSION	
269	3-736-047-01	SPRING (S SOFT), TENSION	
270	X-3729-926-1	BRAKE ASSY (2), T	

Ref. No.	Part No.	Description	Remark
271	3-738-220-01	SPRING (MAIN BRAKE 2), TENSION	
272	X-3733-336-2	BRAKE ASSY (2) (AT), S	
273	3-738-221-01	SPRING (MAIN BRAKE 1), TENSION	
* 274	X-3746-005-1	BASE ASSY (G), DRUM	
275	3-733-389-11	SPRING, TENSION	
276	A-6747-267-A	ARM BLOCK ASSY (S), C ROLLER	
277	3-944-033-01	FLANGE, 7 GUIDE	
278	3-736-730-01	SLEEVE, #7 GUIDE	
279	3-749-099-01	SPRING (#7 GUIDE), COMPRESSION	
280	X-3727-787-1	SHUTTLE (RIGHT) ASSY	
281	X-3729-935-3	LABLE ASSY (2), S REEL	
282	3-736-745-01	SPRING	
283	3-738-284-01	SPRING, TENSION	
284	X-3746-004-1	GROUND ASSY, SHAFT	
285	3-736-073-01	SLIDER, POLYETHYLENE	
286	X-3743-517-1	LEVER (S), RELEASE, C ROLLER	
287	3-736-735-03	SPRING, TENSION	
288	3-942-867-01	NUT, AC HEIGHT ADJUSTMENT	
M901	1-550-656-11	LOWER DRUM ASSY (DZL-32A-R)	

5-7. MD CHASSIS ASSEMBLY 3

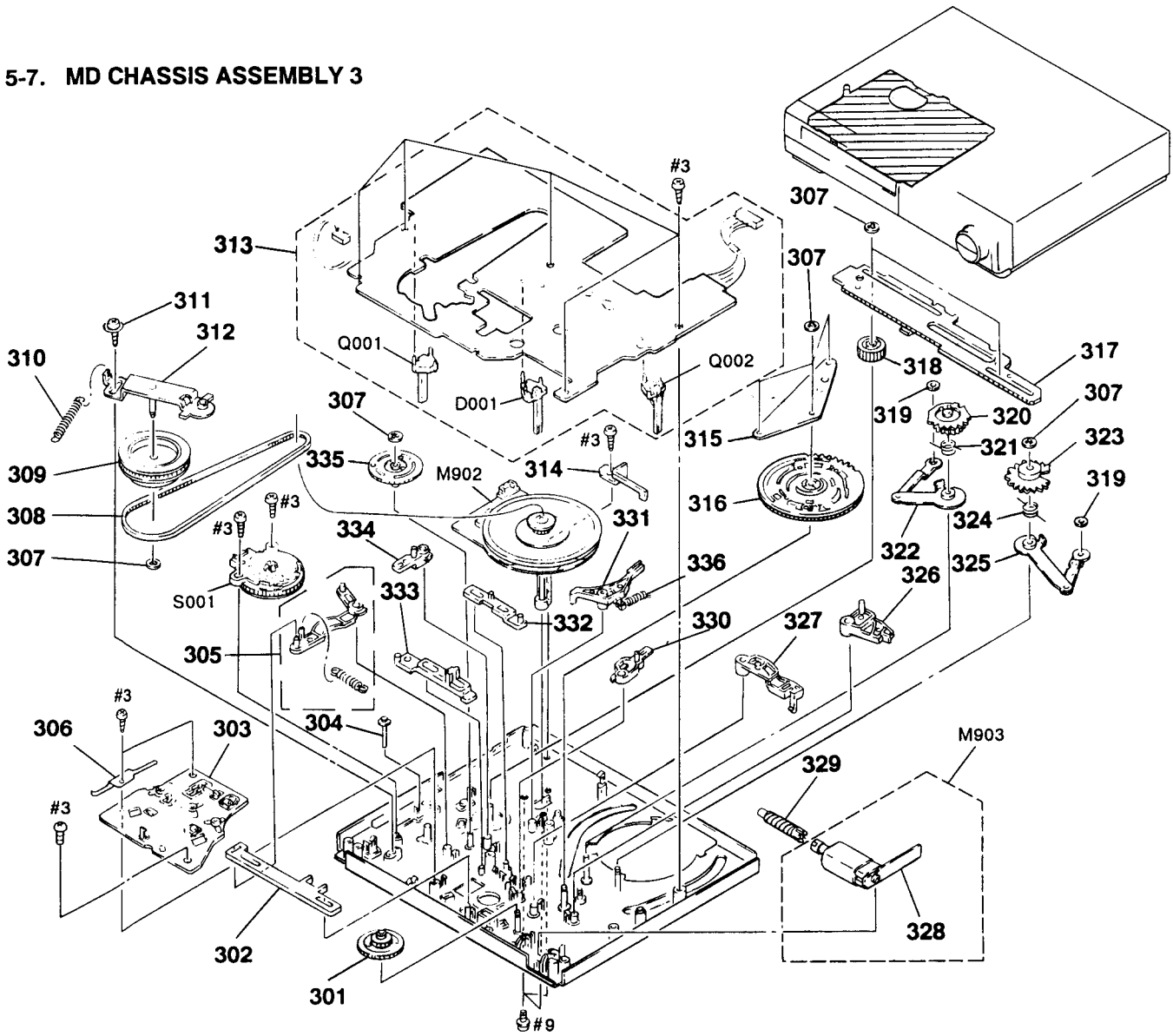

Ref. No.	Part No.	Description	Remark
301	3-736-015-01	WHEEL (CAM), WORM	
302	3-736-158-01	PLATE, SLIDE, PENDULUM	
303	A-6739-084-A	CHASSIS BLOCK ASSY, SUB	
304	3-736-091-01	PIN, SWITCH	
305	X-3729-924-1	ARM, PENDULUM FUNCTION	
306	3-741-950-01	SPRING (AT), LEAF, SC GROUND	
307	3-669-595-00	WASHER (2), STOPPER	
308	3-736-013-01	BELT, TIMING	
309	X-3727-782-1	PULLEY ASSY	
310	3-736-089-01	SPRING, TENSION	
311	3-733-386-01	SCREW (3X8), WASHER	
312	X-3727-761-1	ARM ASSY, ADJUSTMENT	
313	A-6754-356-A	MD-40 BOARD, COMPLETE	
314	3-736-744-01	RETAINER, ROTOR	
315	3-733-396-01	HOLDER, CAM GEAR	
316	3-736-176-01	GEAR, CAM	
317	3-736-177-01	PLATE, SLIDE, MODE	
318	3-733-394-01	GEAR, RVS RELAY	
319	3-736-073-01	SLIDER, POLYETHYLENE	
320	3-736-148-01	GEAR (RIGHT), THREADING	
321	3-736-092-01	SPRING (RIGHT), TORSION	

Ref. No.	Part No.	Description	Remark
322	X-3727-777-1	ARM (RIGHT) ASSY, THREADING	
323	3-736-147-01	GEAR (LEFT), THREADING	
324	3-736-040-01	SPRING (LEFT), TORSION	
325	X-3727-778-1	ARM (LEFT) ASSY, THREADING	
326	3-736-142-01	ARM, TENSION REGULATOR FUNCTION	
327	3-736-140-01	ARM, S TAKE-UP	
* 328	1-633-460-11	PC BOAD, CA-41	
329	3-733-395-01	GEAR (CAM), WORM	
330	3-733-397-01	ARM, BRAKE FUNCTION	
331	X-3733-338-1	BRAKE ASSY (AT), CAP	
332	3-733-398-01	PLATE, SLIDE, BRAKE	
333	3-736-103-01	PLATE, SLIDE, LIMITER	
334	3-736-016-01	ARM, LIMITER FUNCTION	
335	3-736-170-01	GEAR, RKB CAM	
336	3-738-237-01	SPRING (CAP BRAKE), TENSION	
D001	8-719-985-00	DIODE GL451VS1 (LED)	
M902	8-835-394-11	MOTOR, DC U-26F	
M903	X-3733-302-1	MOTOR ASSY, CAM	
Q001	8-729-926-31	PHOTO TRANSISTOR PT483F1S	
S001	1-692-062-21	SWITCH, ROTARY	

CP-52

SECTION 6
ELECTRICAL PARTS LIST

NOTE:

The components identified by mark ⚠ or dotted line with mark ⚠ are critical for safety.
Replace only with part number specified.

When indicating parts by refer-ence number, please include the board name.

- Due to standardization, replacements in the parts list may be different from the parts specified in the diagrams or the components used on the set.
- -XX, -X mean standardized parts, so they may have some difference from the original one.
- RESISTORS
  All resistors are in ohms
  METAL: Metal-film resistor
  METAL OXIDE: Metal Oxide-film resistor
  F : nonflammable
- Items marked "*" are not stocked since they are seldom required for routine service. Some delay should be anticipated when ordering these items.
- SEMICONDUCTORS
  In each case, u: μ , for example:
  uA...: μA..., uPA...: μPA...,
  uPB...: μPB..., uPC...: μPC...,
  uPD...: μPD...
- CAPACITORS
  uF : μF
- COILS
  uH : μH

Ref. No.	Part No.	Description			Remark
*	A-6754-287-A	CP-52 BOARD, COMPLETE (CP MODEL)			
		**********			
			(Ref. No 2,000 Series)		
		〈 CAPACITOR 〉			
C101	1-126-154-11	ELECT	47uF	20%	6.3V
C102	1-126-301-11	ELECT	1uF	20%	50V
C103	1-244-463-00	ELECT	0.1uF	20%	50V
C104	1-126-301-11	ELECT	1uF	20%	50V
C105	1-126-301-11	ELECT	1uF	20%	50V
C107	1-162-839-11	CERAMIC	0.01uF	10%	16V
C181	1-162-294-31	CERAMIC	0.001uF	10%	50V
C182	1-126-154-11	ELECT	47uF	20%	6.3V
C202	1-126-154-11	ELECT	47uF	20%	6.3V
C203	1-126-154-11	ELECT	47uF	20%	6.3V
C204	1-126-154-11	ELECT	47uF	20%	6.3V
C205	1-126-154-11	ELECT	47uF	20%	6.3V
C206	1-126-154-11	ELECT	47uF	20%	6.3V
C207	1-126-154-11	ELECT	47uF	20%	6.3V
C208	1-126-154-11	ELECT	47uF	20%	6.3V
C209	1-162-839-11	CERAMIC	0.01uF	10%	16V
C280	1-162-284-31	CERAMIC	150PF	10%	50V
C281	1-162-284-31	CERAMIC	150PF	10%	50V
C282	1-162-294-31	CERAMIC	0.001uF	10%	50V
C283	1-162-294-31	CERAMIC	0.001uF	10%	50V
		〈 CONNECTOR 〉			
CN101	1-573-122-11	SOCKET, CONNECTOR 12P			
CN102	1-573-122-11	SOCKET, CONNECTOR 12P			
CN103	1-506-490-21	PIN, CONNECTOR 11P			
		〈 DIODE 〉			
D001	8-719-940-82	DIODE SLR-34MC3			
D180	8-719-109-97	DIODE RD6.8ES-B2			
D181	8-719-109-97	DIODE RD6.8ES-B2			
D182	8-719-109-97	DIODE RD6.8ES-B2			
D183	8-719-109-97	DIODE RD6.8ES-B2			
D280	8-719-109-97	DIODE RD6.8ES-B2			
D281	8-719-109-97	DIODE RD6.8ES-B2			

Ref. No.	Part No.	Description			Remark
		〈 IC 〉			
IC101	8-759-504-94	IC BA7630S			
IC201	8-759-509-16	IC XRU4053B			
		〈 COIL 〉			
L101	1-408-421-00	INDUCTOR 100uH			
L201	1-408-421-00	INDUCTOR 100uH			
L280	1-410-336-11	INDUCTOR 220uH			
L281	1-410-336-11	INDUCTOR 220uH			
		〈 TRANSISTOR 〉			
Q101	8-729-119-89	TRANSISTOR 2SC2785-HFE			
Q102	8-729-900-89	TRANSISTOR DTC144ES			
Q103	8-729-920-68	TRANSISTOR 2SA933S			
Q126	8-729-900-89	TRANSISTOR DTC144ES			
Q127	8-729-920-68	TRANSISTOR 2SA933S			
Q180	8-729-119-89	TRANSISTOR 2SC2785-HFE			
Q201	8-729-119-89	TRANSISTOR 2SC2785-HFE			
Q202	8-729-119-89	TRANSISTOR 2SC2785-HFE			
Q203	8-729-119-89	TRANSISTOR 2SC2785-HFE			
		〈 RESISTOR 〉			
R101	1-249-429-11	CARBON	10K	5%	1/4W
R102	1-249-429-11	CARBON	10K	5%	1/4W
R103	1-249-429-11	CARBON	10K	5%	1/4W
R104	1-249-429-11	CARBON	10K	5%	1/4W
R106	1-249-429-11	CARBON	10K	5%	1/4W
R107	1-249-424-11	CARBON	3.9K	5%	1/4W
R108	1-249-403-11	CARBON	68	5%	1/4W
R109	1-249-417-11	CARBON	1K	5%	1/4W
R110	1-249-417-11	CARBON	1K	5%	1/4W
R111	1-249-417-11	CARBON	1K	5%	1/4W
R123	1-249-417-11	CARBON	1K	5%	1/4W
R150	1-249-427-11	CARBON	6.8K	5%	1/4W
R151	1-249-425-11	CARBON	4.7K	5%	1/4W
R180	1-249-429-11	CARBON	10K	5%	1/4W
R181	1-249-427-11	CARBON	6.8K	5%	1/4W
R182	1-249-419-11	CARBON	1.5K	5%	1/4W
R201	1-249-421-11	CARBON	2.2K	5%	1/4W

Ref. No.	Part No.	Description				Remark
R202	1-249-421-11	CARBON	2.2K	5%	1/4W	
R203	1-249-417-11	CARBON	1K	5%	1/4W	
R204	1-249-417-11	CARBON	1K	5%	1/4W	
R205	1-249-437-11	CARBON	47K	5%	1/4W	
R206	1-249-437-11	CARBON	47K	5%	1/4W	
R207	1-249-437-11	CARBON	47K	5%	1/4W	
R208	1-249-437-11	CARBON	47K	5%	1/4W	
R209	1-249-421-11	CARBON	2.2K	5%	1/4W	
R210	1-249-405-11	CARBON	100	5%	1/4W	
R291	1-249-426-11	CARBON	5.6K	5%	1/4W	
R391	1-249-426-11	CARBON	5.6K	5%	1/4W	
**********						
*	1-639-198-11	CP-53 BOARD (CP MODEL)				
		**********				
						(Ref. No 3,000 Series)
		⟨ CONNECTOR ⟩				
* CN121	1-506-490-21	PIN, CONNECTOR 11P				
CN122	1-506-485-11	PIN, CONNECTOR 6P				
		⟨ JACK ⟩				
CNJ120	1-561-534-41	SOCKET 21P (CANAL PLUS)				
		⟨ DIODE ⟩				
D190	8-719-109-97	DIODE RD6.8ES-B2				
D191	8-719-109-97	DIODE RD6.8ES-B2				
		⟨ RESISTOR ⟩				
R120	1-249-403-11	CARBON	68	5%	1/4W	
**********						
*	A-6713-487-A	CV-26 BOARD, COMPLETE (VP MODEL)				
		**********				
*	A-6713-488-A	CV-26 BOARD, COMPLETE (EXCEPT VP MODEL)				
		**********				
						(Ref. No 8,000 Series)
		⟨ CAPACITOR ⟩				
C401	1-162-847-11	CERAMIC	0.047uF	20%	16V	

Ref. No.	Part No.	Description			Remark
C402	1-162-854-11	CERAMIC	0.0015uF	20%	16V
C403	1-124-477-11	ELECT	47uF	20%	25V
C404	1-102-961-00	CERAMIC	27PF	5%	50V
C405	1-164-060-11	CERAMIC	39PF	5%	50V
C406	1-124-477-11	ELECT	47uF	20%	25V
C407	1-164-058-11	CERAMIC	33PF	5%	50V (VP MODEL)
C408	1-124-907-11	ELECT	10uF	20%	50V
C410	1-162-839-11	CERAMIC	0.01uF	10%	16V
C411	1-124-477-11	ELECT	47uF	20%	25V
C413	1-162-839-11	CERAMIC	0.01uF	10%	16V
C414	1-162-839-11	CERAMIC	0.01uF	10%	16V
C415	1-162-203-31	CERAMIC	15PF	5%	50V
C416	1-164-052-11	CERAMIC	18PF	5%	50V
C417	1-162-839-11	CERAMIC	0.01uF	10%	16V
C419	1-162-835-11	CERAMIC	0.0047uF	20%	16V
C420	1-164-085-11	CERAMIC	0.001uF	10%	50V
C421	1-124-925-11	ELECT	2.2uF	20%	100V
C450	1-124-907-11	ELECT	10uF	20%	50V
C460	1-124-903-11	ELECT	1uF	20%	50V
C466	1-124-477-11	ELECT	47uF	20%	25V
C467	1-162-839-11	CERAMIC	0.01uF	10%	16V
C491	1-161-772-11	CERAMIC	0.1uF	10%	25V
C492	1-164-082-11	CERAMIC	560PF	10%	50V
C493	1-164-159-11	CERAMIC	0.1uF		50V
C494	1-124-903-11	ELECT	1uF	20%	50V
C495	1-162-843-11	CERAMIC	0.022uF	20%	16V
C496	1-102-122-00	CERAMIC	0.0027uF	10%	50V
C497	1-102-980-00	CERAMIC	270PF	5%	50V
C498	1-102-980-00	CERAMIC	270PF	5%	50V
C801	1-164-081-11	CERAMIC	470PF	10%	50V (VP MODEL)
C802	1-162-827-11	CERAMIC	0.001uF	20%	16V (VP MODEL)
C803	1-162-835-11	CERAMIC	0.0047uF	20%	16V (VP MODEL)
C804	1-162-847-11	CERAMIC	0.047uF	20%	16V (VP MODEL)
C805	1-162-843-11	CERAMIC	0.022uF	20%	16V (VP MODEL)
C806	1-164-098-11	CERAMIC	0.047uF		12V (VP MODEL)

CV-26

Ref. No.	Part No.	Description	Remark
C807	1-162-835-11	CERAMIC 0.0047uF 20% 16V	(VP MODEL)
C808	1-161-772-11	CERAMIC 0.1uF 10% 25V	(VP MODEL)
		〈 CONNECTOR 〉	
* CN401	1-563-464-11	SOCKET, CONNECTOR 10P	
* CN402	1-563-464-11	SOCKET, CONNECTOR 10P	
		〈 TRIMMER 〉	
CV401	1-141-227-00	CAP, TRIMMER 20PF	
		〈 DIODE 〉	
D401	8-719-911-19	DIODE 1SS119	
D402	8-719-911-19	DIODE 1SS119	
D403	8-719-911-19	DIODE 1SS119	
D404	8-719-109-97	DIODE RD6.8ES-B2	
D406	8-719-911-19	DIODE 1SS119	
D407	8-719-974-59	DIODE 1SR139-100	
		〈 IC 〉	
IC401	8-759-634-22	IC M50554-182SP	
IC490	8-759-996-03	IC LVA519S	
IC801	8-759-054-25	IC SAA4700 (VP MODEL)	
IC802	8-759-147-30	IC uPD75004GB-VSX182 (VP MODEL)	
		〈 COIL 〉	
L401	1-408-421-00	INDUCTOR 100uH	
L402	1-412-470-21	INDUCTOR 22uH	
L403	1-408-415-00	INDUCTOR 33uH (VP MODEL)	
L404	1-408-421-00	INDUCTOR 100uH	
L405	1-408-414-00	INDUCTOR 27uH	
L406	1-408-415-00	INDUCTOR 33uH	
L408	1-408-421-00	INDUCTOR 100uH	
L490	1-408-421-00	INDUCTOR 100uH	
L841	1-408-409-00	INDUCTOR 10uH	
		〈 TRANSISTOR 〉	
Q401	8-729-119-78	TRANSISTOR 2SC2785-HFE	
Q402	8-729-119-78	TRANSISTOR 2SC2785-HFE (VP MODEL)	
Q403	8-729-119-78	TRANSISTOR 2SC2785-HFE	
Q404	8-729-119-78	TRANSISTOR 2SC2785-HFE	
Q405	8-729-904-39	TRANSISTOR DTC114TS	
Q406	8-729-119-76	TRANSISTOR 2SA1175-HFE	
Q407	8-729-119-78	TRANSISTOR 2SC2785-HFE	
Q451	8-729-119-78	TRANSISTOR 2SC2785-HFE	
		〈 RESISTOR 〉	
R401	1-249-429-11	CARBON 10K 5% 1/4W	
R402	1-249-417-11	CARBON 1K 5% 1/4W	
R403	1-249-421-11	CARBON 2.2K 5% 1/4W	
R404	1-249-413-11	CARBON 470 5% 1/4W	
R405	1-249-413-11	CARBON 470 5% 1/4W	
R406	1-249-433-11	CARBON 22K 5% 1/4W	
R407	1-249-425-11	CARBON 4.7K 5% 1/4W	
R408	1-249-431-11	CARBON 15K 5% 1/4W	
R409	1-249-403-11	CARBON 68 5% 1/4W	
R410	1-249-429-11	CARBON 10K 5% 1/4W	(VP MODEL)
R411	1-249-423-11	CARBON 3.3K 5% 1/4W	
R413	1-249-414-11	CARBON 560 5% 1/4W	
R414	1-249-433-11	CARBON 22K 5% 1/4W	
R415	1-249-409-11	CARBON 220 5% 1/4W	
R418	1-249-441-11	CARBON 100K 5% 1/4W	
R419	1-249-414-11	CARBON 560 5% 1/4W	
R420	1-249-420-11	CARBON 1.8K 5% 1/4W	
R424	1-249-435-11	CARBON 33K 5% 1/4W	
R425	1-249-421-11	CARBON 2.2K 5% 1/4W	
R426	1-249-422-11	CARBON 2.7K 5% 1/4W	
R427	1-249-415-11	CARBON 680 5% 1/4W	
R428	1-249-414-11	CARBON 560 5% 1/4W	
R429	1-249-422-11	CARBON 2.7K 5% 1/4W	
R430	1-249-424-11	CARBON 3.9K 5% 1/4W	
R431	1-249-421-11	CARBON 2.2K 5% 1/4W	
R432	1-249-423-11	CARBON 3.3K 5% 1/4W	
R433	1-249-429-11	CARBON 10K 5% 1/4W	(VP MODEL)
R434	1-249-421-11	CARBON 2.2K 5% 1/4W	
R435	1-247-903-00	CARBON 1M 5% 1/4W	
R436	1-249-422-11	CARBON 2.7K 5% 1/4W	
R437	1-249-429-11	CARBON 10K 5% 1/4W	
R438	1-249-424-11	CARBON 3.9K 5% 1/4W	
R440	1-249-417-11	CARBON 1K 5% 1/4W	
R441	1-249-419-11	CARBON 1.5K 5% 1/4W	

Ref. No.	Part No.	Description				Remark
R460	1-249-417-11	CARBON	1K	5%	1/4W	
R461	1-249-441-11	CARBON	100K	5%	1/4W	
R463	1-249-417-11	CARBON	1K	5%	1/4W	
R490	1-249-429-11	CARBON	10K	5%	1/4W	
R491	1-249-429-11	CARBON	10K	5%	1/4W	
R492	1-249-434-11	CARBON	27K	5%	1/4W	
R493	1-249-422-11	CARBON	2.7K	5%	1/4W	
R494	1-249-429-11	CARBON	10K	5%	1/4W	
R495	1-247-903-00	CARBON	1M	5%	1/4W	
R496	1-249-414-11	CARBON	560	5%	1/4W	
R801	1-249-429-11	CARBON	10K	5%	1/4W	(VP MODEL)
R802	1-249-429-11	CARBON	10K	5%	1/4W	(VP MODEL)
R803	1-249-429-11	CARBON	10K	5%	1/4W	(VP MODEL)
R804	1-249-439-11	CARBON	68K	5%	1/4W	(VP MODEL)
R805	1-249-428-11	CARBON	8.2K	5%	1/4W	(VP MODEL)
R806	1-249-425-11	CARBON	4.7K	5%	1/4W	(VP MODEL)
R811	1-249-429-11	CARBON	10K	5%	1/4W	(VP MODEL)
R812	1-249-429-11	CARBON	10K	5%	1/4W	(VP MODEL)
R850	1-249-433-11	CARBON	22K	5%	1/4W	(VP MODEL)
		〈 VARIABLE RESISTOR 〉				
RV491	1-238-015-11	RES, ADJ, CARBON 4.7K				
		〈 CRYSTAL 〉				
X401	1-577-289-11	VIBRATOR, CRYSTAL 11.7MHz				
X801	1-577-101-11	VIBRATOR, CERAMIC 4.19MHz (VP MODEL)				
**********						
*	A-6756-346-A	MA-125 BOARD, COMPLETE (UB MODEL)				
		**********				
*	A-6756-347-A	MA-125 BOARD, COMPLETE (CP MODEL)				
		**********				
*	A-6756-348-A	MA-125 BOARD, COMPLETE (EI MODEL)				
		**********				
*	A-6756-349-A	MA-125 BOARD, COMPLETE (VP MODEL)				
		**********				
*	A-6756-370-A	MA-125 BOARD, COMPLETE (AEP MODEL)				
		**********				
						(Ref. No 1,000 Series)
	1-558-924-21	CABLE, PIN				
	3-682-057-11	SPACER (SMALL)				
		〈 BUZZER 〉				
BZ501	1-529-070-11	BUZZER				
		〈 CAPACITOR 〉				
C101	1-162-849-11	CERAMIC	0.068uF	10%	16V	
C102	1-126-233-11	ELECT	22uF	20%	50V	
C103	1-124-443-00	ELECT	100uF	20%	10V	
C104	1-161-039-00	CERAMIC	0.001uF	10%	50V	
C105	1-162-849-11	CERAMIC	0.068uF	10%	16V	
C106	1-124-925-11	ELECT	2.2uF	20%	100V	
C107	1-164-159-11	CERAMIC	0.1uF		50V	
C108	1-161-047-00	CERAMIC	0.0047uF	10%	50V	
C110	1-161-379-00	CERAMIC	0.01uF	20%	25V	
C111	1-124-477-11	ELECT	47uF	20%	25V	
C146	1-162-294-31	CERAMIC	0.001uF	10%	50V	
C201	1-161-379-00	CERAMIC	0.01uF	20%	25V	
C202	1-161-379-00	CERAMIC	0.01uF	20%	25V	
C203	1-161-379-00	CERAMIC	0.01uF	20%	25V	
C204	1-101-361-00	CERAMIC	150PF	5%	50V	(EXCEPT VP MODEL)
C205	1-164-081-11	CERAMIC	470PF	10%	50V	
C206	1-162-839-11	CERAMIC	0.01uF	10%	16V	
C207	1-126-233-11	ELECT	22uF	20%	50V	
C208	1-126-233-11	ELECT	22uF	20%	50V	
C210	1-162-197-31	CERAMIC	6.8PF	10%	50V	
C211	1-124-589-11	ELECT	47uF	20%	16V	
C212	1-124-477-11	ELECT	47uF	20%	25V	
C213	1-124-589-11	ELECT	47uF	20%	16V	
C214	1-101-361-00	CERAMIC	150PF	5%	50V	
C216	1-124-477-11	ELECT	47uF	20%	25V	

MA-125

Ref. No.	Part No.	Description				Remark
C217	1-124-257-00	ELECT	2.2uF	20%	50V	
C218	1-124-925-11	ELECT	2.2uF	20%	100V	
				(AEP, UB, VP MODEL)		
C219	1-124-443-00	ELECT	100uF	20%	10V	
C221	1-124-234-00	ELECT	22uF	20%	16V	
C222	1-124-477-11	ELECT	47uF	20%	25V	
C223	1-124-477-11	ELECT	47uF	20%	25V	
C224	1-162-839-11	CERAMIC	0.01uF	10%	16V	
C225	1-124-589-11	ELECT	47uF	20%	16V	
C231	1-162-294-31	CERAMIC	0.001uF	10%	50V	
C292	1-162-290-31	CERAMIC	470PF	10%	50V	
C304	1-124-477-11	ELECT	47uF	20%	25V	
C305	1-130-483-00	MYLAR	0.01uF	5%	50V	
C306	1-124-903-11	ELECT	1uF	20%	50V	
C307	1-164-084-11	CERAMIC	820PF	10%	50V	
C308	1-164-085-11	CERAMIC	0.001uF	10%	50V	
C309	1-126-233-11	ELECT	22uF	20%	50V	
				(EXCEPT EI MODEL)		
C310	1-126-163-11	ELECT	4.7uF	20%	50V	
C312	1-130-488-00	MYLAR	0.027uF	5%	50V	
C313	1-124-903-11	ELECT	1uF	20%	50V	
C314	1-124-903-11	ELECT	1uF	20%	50V	
C315	1-126-160-11	ELECT	1uF	20%	50V	
				(EXCEPT AEP MODEL)		
C316	1-124-477-11	ELECT	47uF	20%	25V	
C317	1-124-477-11	ELECT	47uF	20%	25V	
C318	1-164-086-11	CERAMIC	0.0012uF	10%	50V	
C319	1-102-978-00	CERAMIC	220PF	5%	50V	
C320	1-126-160-11	ELECT	1uF	20%	50V	
C320	1-124-903-11	ELECT	1uF	20%	50V	
C321	1-109-675-11	MICA	120PF	1%	500V	
C322	1-136-558-11	FILM	0.0039uF	10%	630V	
C323	1-162-839-11	CERAMIC	0.01uF	10%	16V	
C324	1-124-589-11	ELECT	47uF	20%	16V	
C325	1-164-087-11	CERAMIC	0.0015uF	10%	50V	
C326	1-164-083-11	CERAMIC	680PF	10%	50V	
C327	1-124-477-11	ELECT	47uF	20%	25V	
C330	1-126-160-11	ELECT	1uF	20%	50V	
C332	1-124-927-11	ELECT	4.7uF	20%	100V	
C391	1-124-925-11	ELECT	2.2uF	20%	100V	
C401	1-130-495-00	MYLAR	0.1uF	5%	50V	
C402	1-124-907-11	ELECT	10uF	20%	50V	
					(AEP MODEL)	

Ref. No.	Part No.	Description				Remark
C403	1-130-487-00	MYLAR	0.022uF	5%	50V	
C405	1-126-101-11	ELECT	100uF	20%	16V	
C407	1-124-907-11	ELECT	10uF	20%	50V	
C410	1-124-234-00	ELECT	22uF	20%	16V	
C411	1-161-379-00	CERAMIC	0.01uF	20%	25V	
C501	1-124-477-11	ELECT	47uF	20%	25V	
C502	1-161-379-00	CERAMIC	0.01uF	20%	25V	
C503	1-124-907-11	ELECT	10uF	20%	50V	
C504	1-164-096-11	CERAMIC	0.01uF		50V	
C505	1-124-478-11	ELECT	100uF	20%	25V	
C512	1-164-052-11	CERAMIC	18PF	5%	50V	
C513	1-164-052-11	CERAMIC	18PF	5%	50V	
C514	1-164-087-11	CERAMIC	0.0015uF	10%	50V	
C700	1-126-233-11	ELECT	22uF	20%	50V	
C702	1-124-119-00	ELECT	330uF	20%	16V	
C703	1-124-122-11	ELECT	100uF	20%	50V	
C705	1-164-096-11	CERAMIC	0.01uF		50V	
C710	1-126-233-11	ELECT	22uF	20%	50V	
C711	1-164-056-11	CERAMIC	27PF	5%	50V	
C712	1-162-839-11	CERAMIC	0.01uF	10%	16V	
C713	1-164-056-11	CERAMIC	27PF	5%	50V	
					(UB MODEL)	
C713	1-164-064-11	CERAMIC	56PF	5%	50V	
				(EXCEPT UB MODEL)		
C715	1-124-443-00	ELECT	100uF	20%	10V	
C716	1-101-886-00	CERAMIC	62PF	5%	50V	
				(EXCEPT UB MODEL)		
C716	1-164-068-11	CERAMIC	82PF	5%	50V	
					(UB MODEL)	
C717	1-124-034-51	ELECT	33uF	20%	16V	
C718	1-164-089-11	CERAMIC	0.0022uF		50V	
C720	1-162-842-11	CERAMIC	0.018uF	10%	16V	
C721	1-124-927-11	ELECT	4.7uF	20%	100V	
C751	1-162-827-11	CERAMIC	0.001uF	10%	16V	
					(VP MODEL)	
C752	1-162-827-11	CERAMIC	0.001uF	10%	16V	
					(VP MODEL)	
C753	1-162-294-31	CERAMIC	0.001uF	10%	50V	
					(VP MODEL)	
C754	1-162-827-11	CERAMIC	0.001uF	10%	16V	
					(VP MODEL)	
C755	1-162-827-11	CERAMIC	0.001uF	10%	16V	
					(VP MODEL)	

Ref. No.	Part No.	Description			Remark
C759	1-124-477-11	ELECT	47uF	20%	25V
C760	1-162-839-11	CERAMIC	0.01uF	10%	16V
C761	1-164-050-11	CERAMIC	15PF	5%	50V (UB MODEL)
C762	1-124-477-11	ELECT	47uF	20%	25V
		⟨ CONNECTOR ⟩			
* CN101	1-508-742-00	PIN, CONNECTOR 3P			
* CN102	1-508-742-00	PIN, CONNECTOR 3P			
CN201	1-568-016-11	SOCKET 21P			
CN202	1-506-473-11	CONNECTOR	8P, MALE		
CN203	1-506-474-11	CONNECTOR	9P, MALE		
* CN301	1-508-742-00	PIN, CONNECTOR 3P			
* CN302	1-508-797-00	PIN, CONNECTOR 4P			
* CN303	1-508-742-00	PIN, CONNECTOR 3P			
* CN401	1-506-981-11	PIN, CONNECTOR 10P			
* CN402	1-506-981-11	PIN, CONNECTOR 10P			
CN501	1-569-344-11	CONNECTOR, BOARD TO BOARD 19P			
CN502	1-569-344-11	CONNECTOR, BOARD TO BOARD 19P			
CN601	1-573-121-11	PIN, CONNECTOR 12P (CP MODEL)			
CN602	1-569-005-11	CONNECTOR, (S) TERMINAL 12P (CP MODEL)			
CN603	1-573-121-11	PIN, CONNECTOR 12P (CP MODEL)			
* CN701	1-565-439-11	PIN, CONNECTOR (PCB) 10P			
* CN702	1-565-343-11	PIN, CONNECTOR (PC BOARD) 7P			
CN903	1-506-475-11	CONNECTOR	10P, MALE		
CN904	1-569-338-11	CONNECTOR, BOARD TO BOARD 19P			
CN907	1-569-338-11	CONNECTOR, BOARD TO BOARD 19P			
		⟨ DIODE ⟩			
D201	8-719-974-59	DIODE	1SR139-100		
D202	8-719-109-97	DIODE	RD6.8ES-B2		
D203	8-719-109-97	DIODE	RD6.8ES-B2		
D206	8-719-109-97	DIODE	RD6.8ES-B2		
D207	8-719-109-97	DIODE	RD6.8ES-B2		
D208	8-719-109-97	DIODE	RD6.8ES-B2		
D209	8-719-109-97	DIODE	RD6.8ES-B2		
D210	8-719-109-97	DIODE	RD6.8ES-B2		
D220	8-719-987-06	DIODE	WG713A		
D220	8-719-911-19	DIODE	1SS119		
D250	8-719-109-97	DIODE	RD6.8ES-B2		
D301	8-719-987-06	DIODE	WG713A		
D301	8-719-911-19	DIODE	1SS119		

Ref. No.	Part No.	Description	Remark
D302	8-719-987-06	DIODE WG713A (EXCEPT EI MODEL)	
D404	8-719-109-85	DIODE RD5.1ES-B2	
D501	8-719-109-97	DIODE RD6.8ES-B2	
D505	8-719-987-06	DIODE WG713A	
D505	8-719-911-19	DIODE 1SS119	
D701	8-719-982-26	DIODE MTZJ-33B	
		⟨ IC ⟩	
IC101	8-759-246-14	IC TA8823N	
IC201	8-759-007-21	IC MC74HC4053N	
IC301	8-759-805-20	IC LA7297	
IC401	8-759-503-91	IC TL082ACP	
IC402	8-759-008-70	IC LM358N	
IC404	8-759-983-45	IC BA6238A	
IC501	8-752-817-87	IC CXP80624-209Q (CP, UB MODEL)	
IC501	8-752-832-90	IC CXP80624-253Q (AEP, EI, VP MODEL)	
		⟨ COIL ⟩	
L101	1-408-409-00	INDUCTOR 10uH	
L201	1-410-521-11	INDUCTOR 100uH (EXCEPT CP MODEL)	
L202	1-408-421-00	INDUCTOR 100uH (EXCEPT CP MODEL)	
L203	1-408-421-00	INDUCTOR 100uH (EXCEPT CP MODEL)	
L204	1-408-425-00	INDUCTOR 220uH	
L206	1-408-421-00	INDUCTOR 100uH	
L207	1-408-422-00	INDUCTOR 120uH	
L208	1-410-521-11	INDUCTOR 100uH	
L209	1-408-415-00	INDUCTOR 33uH	
L250	1-410-522-11	INDUCTOR 120uH	
L251	1-410-521-11	INDUCTOR 100uH (CP MODEL)	
L252	1-410-521-11	INDUCTOR 100uH (CP MODEL)	
L253	1-410-521-11	INDUCTOR 100uH (CP MODEL)	
L291	1-410-336-11	INDUCTOR 220uH	
L292	1-410-336-11	INDUCTOR 220uH	
L301	1-407-503-00	INDUCTOR 8.2mH	
L302	1-410-091-31	INDUCTOR 22mH	
L303	1-408-409-00	INDUCTOR 10uH	
L309	1-410-687-11	INDUCTOR 1.2mH	
L401	1-408-409-00	INDUCTOR 10uH	
L501	1-408-409-00	INDUCTOR 10uH	
L550	1-410-502-11	INDUCTOR 2.7uH	
L551	1-410-502-11	INDUCTOR 2.7uH	
L552	1-410-502-11	INDUCTOR 2.7uH	

MA-125

Ref. No.	Part No.	Description	Remark
L553	1-410-502-11	INDUCTOR 2.7uH	
L554	1-410-522-11	INDUCTOR 120uH	
L555	1-410-522-11	INDUCTOR 120uH	
L701	1-408-409-00	INDUCTOR 10uH	
L702	1-408-425-00	INDUCTOR 220uH	
L703	1-408-413-00	INDUCTOR 22uH	
L705	1-408-413-00	INDUCTOR 22uH (UB MODEL)	
L705	1-408-415-00	INDUCTOR 33uH (EXCEPT UB MODEL)	
L706	1-410-509-11	INDUCTOR 10uH	
L710	1-408-413-00	INDUCTOR 22uH	
		〈 TRANSISTOR 〉	
Q201	8-729-119-78	TRANSISTOR 2SC2785-HFE	
Q202	8-729-119-78	TRANSISTOR 2SC2785-HFE	
Q203	8-729-119-78	TRANSISTOR 2SC2785-HFE	
Q204	8-729-119-76	TRANSISTOR 2SA1175-HFE	
Q205	8-729-900-89	TRANSISTOR DTC144ES	
Q206	8-729-119-76	TRANSISTOR 2SA1175-HFE	
Q207	8-729-119-76	TRANSISTOR 2SA1175-HFE	
Q210	8-729-900-89	TRANSISTOR DTC144ES	
Q220	8-729-119-78	TRANSISTOR 2SC2785-HFE	
Q301	8-729-111-55	TRANSISTOR 2SC1509	
Q302	8-729-119-78	TRANSISTOR 2SC2785-HFE	
Q401	8-729-119-78	TRANSISTOR 2SC2785-HFE	
Q402	8-729-119-76	TRANSISTOR 2SA1175-HFE	
Q501	8-729-119-78	TRANSISTOR 2SC2785-HFE	
Q502	8-729-900-89	TRANSISTOR DTC144ES	
Q503	8-729-900-89	TRANSISTOR DTC144ES	
Q710	8-729-119-78	TRANSISTOR 2SC2785-HFE	
Q711	8-729-119-78	TRANSISTOR 2SC2785-HFE	
Q712	8-729-119-76	TRANSISTOR 2SA1175-HFE	
Q726	8-729-119-78	TRANSISTOR 2SC2785-HFE	
Q751	8-729-111-55	TRANSISTOR 2SC1509	
		〈 RESISTOR 〉	
R102	1-249-439-11	CARBON 68K 5% 1/4W	
R103	1-249-441-11	CARBON 100K 5% 1/4W	
R104	1-249-441-11	CARBON 100K 5% 1/4W	
R106	1-249-435-11	CARBON 33K 5% 1/4W	
R107	1-249-411-11	CARBON 330 5% 1/4W	
R108	1-249-425-11	CARBON 4.7K 5% 1/4W	

Ref. No.	Part No.	Description	Remark
R110	1-249-425-11	CARBON 4.7K 5% 1/4W	
R112	1-249-405-11	CARBON 100 5% 1/4W	
R154	1-247-901-11	CARBON 820K 5% 1/4W	
R201	1-249-429-11	CARBON 10K 5% 1/4W	
R202	1-249-429-11	CARBON 10K 5% 1/4W	
R203	1-249-429-11	CARBON 10K 5% 1/4W	
R204	1-249-417-11	CARBON 1K 5% 1/4W	
R205	1-249-417-11	CARBON 1K 5% 1/4W	
R206	1-249-417-11	CARBON 1K 5% 1/4W	
R207	1-249-417-11	CARBON 1K 5% 1/4W	
R208	1-249-437-11	CARBON 47K 5% 1/4W	
R209	1-249-437-11	CARBON 47K 5% 1/4W	
R210	1-249-437-11	CARBON 47K 5% 1/4W	
R211	1-249-439-11	CARBON 68K 5% 1/4W	
R212	1-249-421-11	CARBON 2.2K 5% 1/4W	
R213	1-249-417-11	CARBON 1K 5% 1/4W	(VP MODEL)
R213	1-249-429-11	CARBON 10K 5% 1/4W	(EXCEPT VP MODEL)
R214	1-249-415-11	CARBON 680 5% 1/4W	(VP MODEL)
R214	1-249-427-11	CARBON 6.8K 5% 1/4W	(EXCEPT VP MODEL)
R215	1-249-414-11	CARBON 560 5% 1/4W	(VP MODEL)
R215	1-249-419-11	CARBON 1.5K 5% 1/4W	(EXCEPT VP MODEL)
R216	1-247-804-11	CARBON 75 5% 1/4W	
R217	1-249-417-11	CARBON 1K 5% 1/4W	
R218	1-249-417-11	CARBON 1K 5% 1/4W	
R220	1-249-417-11	CARBON 1K 5% 1/4W	
R221	1-249-426-11	CARBON 5.6K 5% 1/4W	
R222	1-249-408-11	CARBON 180 5% 1/4W	
R223	1-249-409-11	CARBON 220 5% 1/4W	
R224	1-249-403-11	CARBON 68 5% 1/4W	
R226	1-249-429-11	CARBON 10K 5% 1/4W	
R227	1-249-417-11	CARBON 1K 5% 1/4W	
R228	1-249-421-11	CARBON 2.2K 5% 1/4W	
R229	1-249-429-11	CARBON 10K 5% 1/4W	
R240	1-249-429-11	CARBON 10K 5% 1/4W	
R303	1-249-411-11	CARBON 330 5% 1/4W	
R304	1-247-885-00	CARBON 180K 5% 1/4W	
R305	1-249-429-11	CARBON 10K 5% 1/4W	

Ref. No.	Part No.	Description				Remark
R306	1-249-437-11	CARBON	47K	5%	1/4W	
R307	1-249-436-11	CARBON	39K	5%	1/4W	
R308	1-249-423-11	CARBON	3.3K	5%	1/4W	
R309	1-249-441-11	CARBON	100K	5%	1/4W	
R310	1-249-432-11	CARBON	18K	5%	1/4W	
R311	1-247-903-00	CARBON	1M	5%	1/4W	
R312	1-249-429-11	CARBON	10K	5%	1/4W	
R313	1-249-428-11	CARBON	8.2K	5%	1/4W	
R315	1-249-422-11	CARBON	2.7K	5%	1/4W	
R316	1-249-407-11	CARBON	150	5%	1/4W	
R317	1-249-429-11	CARBON	10K	5%	1/4W	
R318	1-249-429-11	CARBON	10K	5%	1/4W	
R319	1-249-429-11	CARBON	10K	5%	1/4W	
R320	1-249-429-11	CARBON	10K	5%	1/4W	
R321	1-249-433-11	CARBON	22K	5%	1/4W	
R322	1-249-429-11	CARBON	10K	5%	1/4W	
R323	1-249-387-11	CARBON	3.3	5%	1/4W	
R330	1-249-393-11	CARBON	10	5%	1/4W	
R331	1-249-413-11	CARBON	470	5%	1/4W	
R332	1-249-425-11	CARBON	4.7K	5%	1/4W	
R333	1-249-425-11	CARBON	4.7K	5%	1/4W	
R401	1-247-885-00	CARBON	180K	5%	1/4W	
R402	1-249-415-11	CARBON	680	5%	1/4W	
R403	1-249-429-11	CARBON	10K	5%	1/4W	
R404	1-249-415-11	CARBON	680	5%	1/4W	
R405	1-249-423-11	CARBON	3.3K	5%	1/4W	
R406	1-249-423-11	CARBON	3.3K	5%	1/4W	
R408	1-249-418-11	CARBON	1.2K	5%	1/4W	
R409	1-249-429-11	CARBON	10K	5%	1/4W	
R410	1-249-429-11	CARBON	10K	5%	1/4W	
R411	1-249-429-11	CARBON	10K	5%	1/4W	
R412	1-249-429-11	CARBON	10K	5%	1/4W	
R413	1-249-417-11	CARBON	1K	5%	1/4W	
R414	1-249-436-11	CARBON	39K	5%	1/4W	
R418	1-249-413-11	CARBON	470	5%	1/4W	
R501	1-249-417-11	CARBON	1K	5%	1/4W	
R502	1-249-437-11	CARBON	47K	5%	1/4W	
R503	1-249-421-11	CARBON	2.2K	5%	1/4W	
R505	1-249-427-11	CARBON	6.8K	5%	1/4W	
R510	1-249-421-11	CARBON	2.2K	5%	1/4W	
R519	1-249-417-11	CARBON	1K	5%	1/4W	
R520	1-249-433-11	CARBON	22K	5%	1/4W	

Ref. No.	Part No.	Description				Remark
R521	1-249-433-11	CARBON	22K	5%	1/4W	
R522	1-249-433-11	CARBON	22K	5%	1/4W	
R523	1-249-433-11	CARBON	22K	5%	1/4W	
R524	1-249-433-11	CARBON	22K	5%	1/4W	
R525	1-249-433-11	CARBON	22K	5%	1/4W	
R526	1-247-705-11	CARBON	270	5%	1/4W	
R527	1-249-414-11	CARBON	560	5%	1/4W	
R529	1-249-429-11	CARBON	10K	5%	1/4W	
R530	1-249-429-11	CARBON	10K	5%	1/4W	
R533	1-249-417-11	CARBON	1K	5%	1/4W	
R535	1-249-429-11	CARBON	10K	5%	1/4W	
R536	1-249-429-11	CARBON	10K	5%	1/4W	
R551	1-249-437-11	CARBON	47K	5%	1/4W	
R552	1-249-437-11	CARBON	47K	5%	1/4W	
R553	1-249-437-11	CARBON	47K	5%	1/4W	
R554	1-249-437-11	CARBON	47K	5%	1/4W	
R555	1-249-437-11	CARBON	47K	5%	1/4W	
R556	1-249-437-11	CARBON	47K	5%	1/4W	
R557	1-249-437-11	CARBON	47K	5%	1/4W	
R559	1-249-437-11	CARBON	47K	5%	1/4W	
R560	1-249-437-11	CARBON	47K	5%	1/4W	
R562	1-249-437-11	CARBON	47K	5%	1/4W	
R563	1-249-437-11	CARBON	47K	5%	1/4W	
R564	1-249-417-11	CARBON	1K	5%	1/4W	
R700	1-249-435-11	CARBON	33K	5%	1/4W	
R703	1-249-417-11	CARBON	1K	5%	1/4W	
R709	1-249-417-11	CARBON	1K	5%	1/4W	
R712	1-249-409-11	CARBON	220	5%	1/4W	
R713	1-249-417-11	CARBON	1K	5%	1/4W	
R714	1-249-421-11	CARBON	2.2K	5%	1/4W	
R715	1-249-405-11	CARBON	100	5%	1/4W	
R716	1-249-417-11	CARBON	1K	5%	1/4W	
R717	1-249-417-11	CARBON	1K	5%	1/4W	
R720	1-249-417-11	CARBON	1K	5%	1/4W	
R722	1-249-417-11	CARBON	1K	5%	1/4W	
R723	1-249-417-11	CARBON	1K	5%	1/4W	
R725	1-247-826-00	CARBON	620	5%	1/4W	(UB MODEL)
R725	1-249-417-11	CARBON	1K	5%	1/4W	(EXCEPT UB MODEL)
R728	1-249-405-11	CARBON	100	5%	1/4W	
R732	1-249-417-11	CARBON	1K	5%	1/4W	

MA-125 MD-40

Ref. No.	Part No.	Description				Remark
R735	1-249-423-11	CARBON	3.3K	5%	1/4W	
R737	1-249-424-11	CARBON	3.9K	5%	1/4W	
R759	1-247-881-00	CARBON	120K	5%	1/4W	
R760	1-247-885-00	CARBON	180K	5%	1/4W	
R761	1-249-427-11	CARBON	6.8K	5%	1/4W	
R762	1-249-430-11	CARBON	12K	5%	1/4W	
R999	1-249-408-11	CARBON	180	5%	1/4W	
		〈 MODULATOR 〉				
⚠RF201	1-466-328-11	MODULATOR, RF (RFU-2017) (AEP, CP, VP MODEL)				
⚠RF201	1-466-347-11	MODULATOR, RF (RFU-2024) (UB, EI MODEL)				
		〈 VARIABLE RESISTOR 〉				
RV301	1-238-021-11	RES, ADJ, CARBON 220K				
RV501	1-238-016-11	RES, ADJ, CARBON 10K				
		〈 TRANCE 〉				
T301	1-433-330-11	TRANSFORMER, BIAS OSCILLATION				
		〈 TUNER 〉				
⚠TI701	1-465-744-11	TUNER, VIF (BTF-2U601) (UB MODEL)				
⚠TI701	1-465-745-11	TUNER, VIF (BTF-2C401) (VP MODEL)				
⚠TI701	1-465-746-11	TUNER, VIF (BTF-2C402) (AEP, CP MODEL)				
⚠TI701	1-465-747-11	TUNER, VIF (BTF-2C403) (EI MODEL)				
		〈 CRYSTAL 〉				
X501	1-578-774-11	VIBRATOR, CRYSTAL 12MHz				
**********						
	A-6754-356-A	MD-40 BOARD, COMPLETE				
		********** (Ref. No 2,000 Series)				
	1-691-643-11	CONNECTOR, BOARD TO BOARD				
		〈 CAPACITOR 〉				
C001	1-161-494-00	CERAMIC	0.022uF		25V	
C002	1-161-494-00	CERAMIC	0.022uF		25V	
C003	1-126-096-11	ELECT	10uF	20%	35V	
C004	1-161-379-00	CERAMIC	0.01uF	20%	25V	
C005	1-126-096-11	ELECT	10uF	20%	35V	

Ref. No.	Part No.	Description			Remark
C006	1-126-154-11	ELECT	47uF	20%	6.3V
C008	1-164-159-11	CERAMIC	0.1uF		50V
C009	1-164-159-11	CERAMIC	0.1uF		50V
C013	1-164-159-11	CERAMIC	0.1uF		50V
C014	1-164-159-11	CERAMIC	0.1uF		50V
C015	1-164-159-11	CERAMIC	0.1uF		50V
C016	1-126-096-11	ELECT	10uF	20%	35V
C017	1-126-096-11	ELECT	10uF	20%	35V
C018	1-126-096-11	ELECT	10uF	20%	35V
C019	1-162-852-11	CERAMIC	0.15uF	10%	16V
C020	1-162-851-11	CERAMIC	0.1uF	10%	16V
C025	1-126-096-11	ELECT	10uF	20%	35V
C026	1-126-096-11	ELECT	10uF	20%	35V
C027	1-126-096-11	ELECT	10uF	20%	35V
		〈 CONNECTOR 〉			
CN001	1-564-726-11	PIN HEADER, ANGLE 10P			
CN002	1-569-335-11	CONNECTOR, BOARD TO BOARD 9P			
CN004	1-569-341-11	CONNECTOR, BOARD TO BOARD 19P			
CN005	1-506-468-11	CONNECTOR 3P, MALE			
CN006	1-569-333-11	CONNECTOR, BOARD TO BOARD 3P			
CN007	1-569-341-11	CONNECTOR, BOARD TO BOARD 19P			
		〈 DIODE 〉			
D001	8-719-985-00	DIODE GL451VS1			
D004	8-719-109-97	DIODE RD6.8ES-B2			
D005	8-719-109-97	DIODE RD6.8ES-B2			
		〈 IC 〉			
IC002	8-759-912-77	IC LM324N			
IC004	8-759-420-83	IC AN3814K			
IC005	8-759-987-16	IC LM393P			
		〈 PHOTO INTERUPTER 〉			
PH001	8-759-144-33	IC PS6002			
PH002	8-759-144-33	IC PS6002			
		〈 TRANSISTOR 〉			
Q001	8-729-926-31	TRANSISTOR PT483F1S			
Q002	8-729-926-31	TRANSISTOR PT483F1S			

The components identified by mark ⚠ or dotted line with mark ⚠ are critical for safety.
Replace only with part number specified.

Ref. No.	Part No.	Description				Remark
		〈 RESISTOR 〉				
R001	1-249-423-11	CARBON	3.3K	5%	1/4W	
R002	1-249-423-11	CARBON	3.3K	5%	1/4W	
R003	1-249-426-11	CARBON	5.6K	5%	1/4W	
R004	1-249-426-11	CARBON	5.6K	5%	1/4W	
R005	1-249-417-11	CARBON	1K	5%	1/4W	
R006	1-249-441-11	CARBON	100K	5%	1/4W	
R007	1-249-441-11	CARBON	100K	5%	1/4W	
R008	1-249-425-11	CARBON	4.7K	5%	1/4W	
R009	1-249-409-11	CARBON	220	5%	1/4W	
R010	1-249-425-11	CARBON	4.7K	5%	1/4W	
R011	1-249-437-11	CARBON	47K	5%	1/4W	
R012	1-249-421-11	CARBON	2.2K	5%	1/4W	
R013	1-249-429-11	CARBON	10K	5%	1/4W	
R014	1-249-427-11	CARBON	6.8K	5%	1/4W	
R015	1-249-437-11	CARBON	47K	5%	1/4W	
R016	1-249-421-11	CARBON	2.2K	5%	1/4W	
R022	1-249-430-11	CARBON	12K	5%	1/4W	
R023	1-249-429-11	CARBON	10K	5%	1/4W	
R024	1-249-430-11	CARBON	12K	5%	1/4W	
R025	1-249-429-11	CARBON	10K	5%	1/4W	
R026	1-249-437-11	CARBON	47K	5%	1/4W	
R028	1-249-418-11	CARBON	1.2K	5%	1/4W	
R029	1-249-395-11	CARBON	15	5%	1/4W	
R030	1-249-395-11	CARBON	15	5%	1/4W	
R031	1-249-395-11	CARBON	15	5%	1/4W	
⚠R032	1-216-347-11	METAL OXIDE	0.68	5%	1W	F
		〈 SWITCH 〉				
S001	1-570-953-11	SWITCH, PUSH (1 KEY) (CASSETTE UP/DOWN)				
S002	1-570-953-11	SWITCH, PUSH (1 KEY) (REC PRF)				

****

* A-6721-447-A MF-151 BOARD, COMPLETE (UB MODEL)
****

* A-6721-448-A MF-151 BOARD, COMPLETE (CP MODEL)
****

Ref. No.	Part No.	Description				Remark
*	A-6721-449-A	MF-151 BOARD, COMPLETE				
		**********				
		(AEP, EI, VP MODEL)				
		(Ref. No 3,000 Series)				
	1-572-662-11	SWITCH, ROTARY				
		〈 CAPACITOR 〉				
C002	1-162-206-31	CERAMIC	20PF	5%	50V	
C003	1-162-206-31	CERAMIC	20PF	5%	50V	
C004	1-164-159-11	CERAMIC	0.1uF		50V	
C005	1-161-379-00	CERAMIC	0.01uF	20%	25V	
C006	1-128-057-11	ELECT	330uF	20%	6.3V	
C007	1-125-486-11	DOUBLE LAYERS	0.22F		5.5V	
C008	1-164-159-11	CERAMIC	0.1uF		50V	
C009	1-164-159-11	CERAMIC	0.1uF		50V	
C010	1-126-096-11	ELECT	10uF	20%	35V	
C011	1-161-327-00	CERAMIC	0.0033uF	30%	16V	
C012	1-161-379-00	CERAMIC	0.01uF	20%	25V	
C013	1-161-379-00	CERAMIC	0.01uF	20%	25V	
C014	1-161-379-00	CERAMIC	0.01uF	20%	25V	
C015	1-161-379-00	CERAMIC	0.01uF	20%	25V	
C016	1-161-379-00	CERAMIC	0.01uF	20%	25V	
C017	1-164-159-11	CERAMIC	0.1uF		50V	
		〈 CONNECTOR 〉				
CN001	1-569-342-11	CONNECTOR, BOARD TO BOARD 19P				
CN002	1-569-342-11	CONNECTOR, BOARD TO BOARD 19P				
CN003	1-562-631-11	SOCKET, CONNECTOR				
CN004	1-568-671-11	CONNECTOR, BOARD TO BOARD 11P				
CN005	1-580-850-11	CONNECTOR (DMS) 8P				
		〈 DIODE 〉				
D001	8-719-974-59	DIODE 1SR139-100				
D002	8-719-974-59	DIODE 1SR139-100				
D003	8-719-110-08	DIODE RD8.2ES-B2				
D004	8-719-109-97	DIODE RD6.8ES-B2				
D005	8-719-109-97	DIODE RD6.8ES-B2				
D006	8-719-987-06	DIODE WG713A				
D006	8-719-911-19	DIODE 1SS119				

The components identified by mark ⚠ or dotted line with mark ⚠ are critical for safety.
Replace only with part number specified.

MF-151 MF-152

Ref. No.	Part No.	Description				Remark
		⟨ FILTER ⟩				
FL001	1-519-668-31	INDICATION TUBE, FLUORESCENT				
		⟨ IC ⟩				
IC001	8-752-832-89	IC CXP50116-270Q				
IC002	8-759-505-83	IC S-8054ALR-Z				
IC003	8-759-941-78	IC S-8053ALB				
IC004	8-759-501-99	IC ST93C46AB1				
IC005	1-466-131-21	IC GP1U52X				
		⟨ COIL ⟩				
L001	1-410-522-11	INDUCTOR 120uH				
L002	1-410-522-11	INDUCTOR 120uH				
L003	1-410-522-11	INDUCTOR 120uH				
L004	1-410-522-11	INDUCTOR 120uH				
L005	1-410-363-11	INDUCTOR 27uH				
L006	1-410-363-11	INDUCTOR 27uH				
L007	1-410-515-11	INDUCTOR 33uH				
L008	1-410-515-11	INDUCTOR 33uH				
L009	1-410-363-11	INDUCTOR 27uH				
		⟨ RESISTOR ⟩				
R001	1-249-429-11	CARBON	10K	5%	1/4W	
R002	1-247-895-00	CARBON	470K	5%	1/4W	
R003	1-249-423-11	CARBON	3.3K	5%	1/4W	
R004	1-249-429-11	CARBON	10K	5%	1/4W	
R005	1-249-429-11	CARBON	10K	5%	1/4W	
R006	1-249-429-11	CARBON	10K	5%	1/4W	
R007	1-249-429-11	CARBON	10K	5%	1/4W	
R008	1-249-425-11	CARBON	4.7K	5%	1/4W	
R009	1-249-425-11	CARBON	4.7K	5%	1/4W	
R010	1-249-425-11	CARBON	4.7K	5%	1/4W	
R011	1-249-425-11	CARBON	4.7K	5%	1/4W	
R012	1-249-429-11	CARBON	10K	5%	1/4W	
R013	1-249-425-11	CARBON	4.7K	5%	1/4W	
R014	1-249-425-11	CARBON	4.7K	5%	1/4W	
R015	1-249-425-11	CARBON	4.7K	5%	1/4W	
R016	1-249-419-11	CARBON	1.5K	5%	1/4W	
R018	1-249-427-11	CARBON	6.8K	5%	1/4W	(UB MODEL)
R018	1-249-431-11	CARBON	15K	5%	1/4W	(VP MODEL)

Ref. No.	Part No.	Description				Remark
R018	1-249-419-11	CARBON	1.5K	5%	1/4W	(CP MODEL)
R019	1-249-419-11	CARBON	1.5K	5%	1/4W	
R020	1-249-420-11	CARBON	1.8K	5%	1/4W	
R021	1-249-429-11	CARBON	10K	5%	1/4W	
R022	1-249-419-11	CARBON	1.5K	5%	1/4W	
R023	1-249-420-11	CARBON	1.8K	5%	1/4W	
R025	1-249-417-11	CARBON	1K	5%	1/4W	
R028	1-249-425-11	CARBON	4.7K	5%	1/4W	
R030	1-249-429-11	CARBON	10K	5%	1/4W	
R031	1-249-429-11	CARBON	10K	5%	1/4W	
R032	1-249-429-11	CARBON	10K	5%	1/4W	
R033	1-249-420-11	CARBON	1.8K	5%	1/4W	
R034	1-216-378-11	METAL OXIDE	5.6	5%	2W	F
R050	1-249-437-11	CARBON	47K	5%	1/4W	
		⟨ SWITCH ⟩				
S001	1-571-977-11	SWITCH, TACTIL (PAUSE ▮▮)				
S002	1-571-977-11	SWITCH, TACTIL (Hi-SPEED REWIND ◀◀◀)				
		⟨ CRYSTAL ⟩				
X001	1-577-101-11	VIBRATOR, CERAMIC (4.19MHz)				
X002	1-567-098-00	OSCILLATOR, CRYSTAL (32.768kHz)				
**********						
*	A-6754-408-A	MF-152 BOARD, COMPLETE (UB MODEL)				
		**********				
*	A-6754-409-A	MF-152 BOARD, COMPLETE (VP MODEL)				
		**********				
*	A-6754-410-A	MF-152 BOARD, COMPLETE				
		**********				
						(AEP, EI, CP MODEL)
						(Ref. No 4,000 Series)
	1-570-865-11	SWITCH, SLIDE				
	1-555-110-00	CABLE, PIN				
		⟨ CAPACITOR ⟩				
C052	1-161-379-00	CERAMIC	0.01uF	20%	25V	

Ref. No.	Part No.	Description			Remark
		⟨ CONNECTOR ⟩			
CN051	1-568-665-11	CONNECTOR, BOARD TO BOARD 11P			
		⟨ DIODE ⟩			
D051	8-719-970-67	DIODE SLR-34MC80F215			
D052	8-719-970-67	DIODE SLR-34MC80F215			
D053	8-719-911-19	DIODE 1SS133T (UB MODEL)			
D055	8-719-940-99	DIODE SLV-34VC3 (UB MODEL)			
D058	8-719-911-19	DIODE 1SS133T (UB MODEL)			
D059	8-719-911-19	DIODE 1SS133T (UB MODEL)			
D060	8-719-911-19	DIODE 1SS133T (UB MODEL)			
		⟨ RESISTOR ⟩			
R051	1-249-401-11	CARBON	47	5% 1/4W	
R052	1-249-404-11	CARBON	82	5% 1/4W	(UB MODEL)
R053	1-249-405-11	CARBON	100	5% 1/4W	(UB MODEL)
R054	1-249-427-11	CARBON	6.8K	5% 1/4W	
R055	1-249-417-11	CARBON	1K	5% 1/4W	
R057	1-249-423-11	CARBON	3.3K	5% 1/4W	
		⟨ VARIABLE RESISTOR ⟩			
RV051	1-230-819-11	RES, ADJ, CARBON 2K (SHARPNESS)			
		⟨ SWITCH ⟩			
S051	1-571-977-11	SWITCH, TACTIL (POWER)			
S052	1-571-977-11	SWITCH, TACTIL (EJECT ▲)			
S054	1-570-865-11	SWITCH, SLIDE (PAL→MESECAM) (UB MODEL)			
S055	1-571-977-11	SWITCH, TACTIL (RESET)			
**********					
*	A-6726-326-A	PC-54 BOARD, COMPLETE			
		**********			
		(Ref. No 7,000 Series)			
		⟨ CAPACITOR ⟩			
C201	1-162-839-11	CERAMIC	0.01uF	10% 16V	
C202	1-164-031-11	CERAMIC	33PF	5% 50V	
C203	1-102-824-00	CERAMIC	470PF	5% 50V	
C204	1-102-525-11	CERAMIC	68PF	5% 50V	

Ref. No.	Part No.	Description			Remark
C205	1-162-839-11	CERAMIC	0.01uF	10%	16V
C206	1-162-851-11	CERAMIC	0.1uF	10%	16V
C207	1-124-234-00	ELECT	22uF	20%	16V
C208	1-161-379-00	CERAMIC	0.01uF	20%	25V
C801	1-164-159-11	CERAMIC	0.1uF		50V
C802	1-124-442-00	ELECT	330uF	20%	6.3V
C803	1-161-379-00	CERAMIC	0.01uF	20%	25V
C804	1-164-159-11	CERAMIC	0.1uF		50V
C805	1-161-494-00	CERAMIC	0.022uF		25V
C806	1-161-379-00	CERAMIC	0.01uF	20%	25V
C807	1-164-096-11	CERAMIC	0.01uF		50V
C808	1-161-379-00	CERAMIC	0.01uF	20%	25V
C809	1-102-978-00	CERAMIC	220PF	5%	50V
C810	1-102-978-00	CERAMIC	220PF	5%	50V
C811	1-164-031-11	CERAMIC	33PF	5%	50V
C812	1-161-379-00	CERAMIC	0.01uF	20%	25V
C813	1-124-584-00	ELECT	100uF	20%	10V
C814	1-124-584-00	ELECT	100uF	20%	10V
C815	1-130-499-00	MYLAR	0.22uF	5%	50V
C816	1-126-163-11	ELECT	4.7uF	20%	50V
C817	1-161-379-00	CERAMIC	0.01uF	20%	25V
C818	1-161-061-11	CERAMIC	0.068uF	10%	50V
C820	1-164-070-11	CERAMIC	100PF	5%	50V
C821	1-164-159-11	CERAMIC	0.1uF		50V
C823	1-124-927-11	ELECT	4.7uF	20%	100V
C825	1-130-495-00	MYLAR	0.1uF	5%	50V
C826	1-164-098-11	CERAMIC	0.047uF		12V
C827	1-164-159-11	CERAMIC	0.1uF		50V
C829	1-161-379-00	CERAMIC	0.01uF	20%	25V
C830	1-164-159-11	CERAMIC	0.1uF		50V
C831	1-101-361-00	CERAMIC	150PF	5%	50V
C832	1-124-903-11	ELECT	1uF	20%	50V
C833	1-161-379-00	CERAMIC	0.01uF	20%	25V
C836	1-162-851-11	CERAMIC	0.1uF	10%	16V
C837	1-164-052-11	CERAMIC	18PF	5%	50V
C838	1-124-126-00	ELECT	47uF	20%	10V
C840	1-164-096-11	CERAMIC	0.01uF		50V
C841	1-164-096-11	CERAMIC	0.01uF		50V
C842	1-164-096-11	CERAMIC	0.01uF		50V
C848	1-164-096-11	CERAMIC	0.01uF		50V
C849	1-130-497-00	MYLAR	0.15uF	5%	50V

PC-54

Ref. No.	Part No.	Description	Remark
		〈 CONNECTOR 〉	
CN801	1-573-123-11	CONNECTOR, BOARD TO BOARD 15P	
		〈 DIODE 〉	
D801	8-719-911-19	DIODE 1SS119	
		〈 DELAY 〉	
DL801	1-415-602-11	DELAY LINE, GLASS	
		〈 FILTER 〉	
FL801	1-239-915-11	FILTER, BAND PASS	
FL802	1-236-311-11	FILTER, BAND PASS	
FL803	1-527-849-00	FILTER, CERAMIC	
		〈 IC 〉	
IC801	8-759-320-78	IC HA118016NT	
		〈 COIL 〉	
L201	1-410-423-11	INDUCTOR 22uH	
L202	1-408-409-00	INDUCTOR 10uH	
L203	1-410-423-11	INDUCTOR 22uH	
L801	1-408-421-00	INDUCTOR 100uH	
L802	1-408-427-00	INDUCTOR 330uH	
L803	1-408-429-00	INDUCTOR 470uH	
L805	1-410-509-11	INDUCTOR 10uH	
L806	1-408-408-00	INDUCTOR 8.2uH	
L807	1-408-408-00	INDUCTOR 8.2uH	
L809	1-407-499-00	INDUCTOR 3.9mH	
		〈 TRANSISTOR 〉	
Q201	8-729-119-78	TRANSISTOR 2SC2785-HFE	
Q202	8-729-119-78	TRANSISTOR 2SC2785-HFE	
Q203	8-729-119-78	TRANSISTOR 2SC2785-HFE	
Q204	8-729-119-78	TRANSISTOR 2SC2785-HFE	
Q801	8-729-119-78	TRANSISTOR 2SC2785-HFE	
Q802	8-729-119-78	TRANSISTOR 2SC2785-HFE	
Q804	8-729-900-80	TRANSISTOR DTC114ES	
Q805	8-729-119-76	TRANSISTOR 2SA1175-HFE	
Q806	8-729-900-89	TRANSISTOR DTC144ES	
Q807	8-729-119-78	TRANSISTOR 2SC2785-HFE	
Q808	8-729-119-78	TRANSISTOR 2SC2785-HFE	
Q809	8-729-119-78	TRANSISTOR 2SC2785-HFE	
Q812	8-729-119-78	TRANSISTOR 2SC2785-HFE	
Q851	8-729-903-02	TRANSISTOR DTA143XS	
Q852	8-729-900-89	TRANSISTOR DTC144ES	
		〈 RESISTOR 〉	
R201	1-249-431-11	CARBON 15K 5% 1/4W	
R202	1-249-430-11	CARBON 12K 5% 1/4W	
R203	1-249-417-11	CARBON 1K 5% 1/4W	
R204	1-249-417-11	CARBON 1K 5% 1/4W	
R205	1-249-418-11	CARBON 1.2K 5% 1/4W	
R206	1-249-417-11	CARBON 1K 5% 1/4W	
R207	1-247-897-11	CARBON 560K 5% 1/4W	
R208	1-249-421-11	CARBON 2.2K 5% 1/4W	
R209	1-249-428-11	CARBON 8.2K 5% 1/4W	
R210	1-249-421-11	CARBON 2.2K 5% 1/4W	
R211	1-249-412-11	CARBON 390 5% 1/4W	
R212	1-249-407-11	CARBON 150 5% 1/4W	
R213	1-249-437-11	CARBON 47K 5% 1/4W	
R214	1-249-427-11	CARBON 6.8K 5% 1/4W	
R215	1-249-435-11	CARBON 33K 5% 1/4W	
R216	1-249-429-11	CARBON 10K 5% 1/4W	
R217	1-249-405-11	CARBON 100 5% 1/4W	
R801	1-249-417-11	CARBON 1K 5% 1/4W	
R802	1-249-417-11	CARBON 1K 5% 1/4W	
R803	1-249-413-11	CARBON 470 5% 1/4W	
R804	1-249-417-11	CARBON 1K 5% 1/4W	
R805	1-249-433-11	CARBON 22K 5% 1/4W	
R806	1-249-435-11	CARBON 33K 5% 1/4W	
R808	1-249-418-11	CARBON 1.2K 5% 1/4W	
R809	1-249-417-11	CARBON 1K 5% 1/4W	
R810	1-249-415-11	CARBON 680 5% 1/4W	
R811	1-249-417-11	CARBON 1K 5% 1/4W	
R812	1-249-423-11	CARBON 3.3K 5% 1/4W	
R813	1-249-413-11	CARBON 470 5% 1/4W	
R814	1-249-415-11	CARBON 680 5% 1/4W	
R815	1-249-417-11	CARBON 1K 5% 1/4W	
R816	1-249-441-11	CARBON 100K 5% 1/4W	
R817	1-249-405-11	CARBON 100 5% 1/4W	
R818	1-249-412-11	CARBON 390 5% 1/4W	
R819	1-249-421-11	CARBON 2.2K 5% 1/4W	

Ref. No.	Part No.	Description				Remark
R820	1-249-427-11	CARBON	6.8K	5%	1/4W	
R822	1-249-420-11	CARBON	1.8K	5%	1/4W	
R823	1-249-423-11	CARBON	3.3K	5%	1/4W	
R824	1-249-417-11	CARBON	1K	5%	1/4W	
R825	1-249-427-11	CARBON	6.8K	5%	1/4W	
R826	1-249-422-11	CARBON	2.7K	5%	1/4W	
R827	1-249-424-11	CARBON	3.9K	5%	1/4W	
R828	1-249-410-11	CARBON	270	5%	1/4W	
R832	1-249-409-11	CARBON	220	5%	1/4W	
R833	1-249-411-11	CARBON	330	5%	1/4W	
R834	1-249-422-11	CARBON	2.7K	5%	1/4W	
R835	1-249-411-11	CARBON	330	5%	1/4W	
R836	1-249-411-11	CARBON	330	5%	1/4W	
R837	1-249-425-11	CARBON	4.7K	5%	1/4W	
R838	1-249-437-11	CARBON	47K	5%	1/4W	
R839	1-249-417-11	CARBON	1K	5%	1/4W	
R850	1-249-429-11	CARBON	10K	5%	1/4W	
R858	1-249-435-11	CARBON	33K	5%	1/4W	
		〈 VARIABLE RESISTOR 〉				
RV801	1-238-012-11	RES, ADJ, CARBON 1K				
		〈 CRYSTAL 〉				
X801	1-577-651-11	VIBRATOR, CRYSTAL (4.43MHz)				
**********						
*	A-6727-327-A	RP-100 BOARD, COMPLETE				
		**********				
		(Ref. No 5,000 Series)				
*	3-746-014-01	CASE (MAIN), GRP				
*	3-746-015-01	CASE (UPPER), GRP				
		〈 CAPACITOR 〉				
C001	1-162-839-11	CERAMIC	0.01uF	10%	16V	
C002	1-124-465-00	ELECT	0.47uF	20%	50V	
C003	1-124-465-00	ELECT	0.47uF	20%	50V	
C004	1-164-031-11	CERAMIC	33PF	5%	50V	
C005	1-164-031-11	CERAMIC	33PF	5%	50V	
C006	1-124-465-00	ELECT	0.47uF	20%	50V	
C007	1-124-465-00	ELECT	0.47uF	20%	50V	
C008	1-162-306-11	CERAMIC	0.01uF	20%	16V	

Ref. No.	Part No.	Description				Remark
C009	1-162-306-11	CERAMIC	0.01uF	20%	16V	
C010	1-124-465-00	ELECT	0.47uF	20%	50V	
C011	1-124-465-00	ELECT	0.47uF	20%	50V	
C012	1-164-027-11	CERAMIC	22PF	5%	50V	
C013	1-164-031-11	CERAMIC	33PF	5%	50V	
C014	1-124-465-00	ELECT	0.47uF	20%	50V	
C015	1-124-465-00	ELECT	0.47uF	20%	50V	
C016	1-162-839-11	CERAMIC	0.01uF	10%	16V	
C017	1-162-306-11	CERAMIC	0.01uF	20%	16V	
C018	1-126-154-11	ELECT	47uF	20%	6.3V	
C019	1-162-306-11	CERAMIC	0.01uF	20%	16V	
C020	1-126-154-11	ELECT	47uF	20%	6.3V	
C021	1-161-375-00	CERAMIC	0.0022uF	20%	50V	
C022	1-161-375-00	CERAMIC	0.0022uF	20%	50V	
C023	1-162-839-11	CERAMIC	0.01uF	10%	16V	
C024	1-124-463-00	ELECT	0.1uF	20%	50V	
C025	1-162-839-11	CERAMIC	0.01uF	10%	16V	
C026	1-162-306-11	CERAMIC	0.01uF	20%	16V	
C027	1-164-027-11	CERAMIC	22PF	5%	50V	
C028	1-162-839-11	CERAMIC	0.01uF	10%	16V	
C029	1-162-839-11	CERAMIC	0.01uF	10%	16V	
C030	1-164-023-11	CERAMIC	15PF	5%	50V	
C031	1-162-839-11	CERAMIC	0.01uF	10%	16V	
C032	1-164-033-11	CERAMIC	39PF	5%	50V	
C033	1-162-839-11	CERAMIC	0.01uF	10%	16V	
C034	1-102-973-00	CERAMIC	100PF	5%	50V	
C035	1-102-525-11	CERAMIC	68PF	5%	50V	
C036	1-102-820-00	CERAMIC	330PF	5%	50V	
C037	1-162-839-11	CERAMIC	0.01uF	10%	16V	
C038	1-126-154-11	ELECT	47uF	20%	6.3V	
C039	1-162-839-11	CERAMIC	0.01uF	10%	16V	
C040	1-162-839-11	CERAMIC	0.01uF	10%	16V	
C041	1-162-839-11	CERAMIC	0.01uF	10%	16V	
C042	1-162-839-11	CERAMIC	0.01uF	10%	16V	
		〈 CONNECTOR 〉				
CN001	1-569-709-11	SOCKET, CONNECTOR 8P				
* CN002	1-564-030-00	PIN, CONNECTOR 5P				
* CN003	1-564-020-71	PIN, CONNECTOR 10P				
CN004	1-506-489-11	CONNECTOR 10P, MALE				

RP-100 YP-11

Ref. No.	Part No.	Description				Remark
		〈 DIODE 〉				
D001	8-719-911-19	DIODE 1SS119				
D002	8-719-911-19	DIODE 1SS119				
D003	8-719-911-19	DIODE 1SS119				
		〈 IC 〉				
IC001	8-759-320-52	IC HA118019NT				
		〈 COIL 〉				
L001	1-407-169-XX	INDUCTOR 100uH				
L002	1-407-169-XX	INDUCTOR 100uH				
L003	1-408-975-21	INDUCTOR 27uH				
L004	1-408-973-21	INDUCTOR 18uH				
L005	1-408-977-21	INDUCTOR 39uH				
L006	1-408-970-21	INDUCTOR 10uH				
L007	1-408-973-21	INDUCTOR 18uH				
L008	1-408-985-21	INDUCTOR 180uH				
L009	1-407-169-XX	INDUCTOR 100uH				
		〈 TRANSISTOR 〉				
Q002	8-729-119-76	TRANSISTOR 2SA1175-HFE				
Q003	8-729-119-78	TRANSISTOR 2SC2785-HFE				
Q004	8-729-900-89	TRANSISTOR DTC144ES				
Q005	8-729-119-78	TRANSISTOR 2SC2785-HFE				
Q006	8-729-900-89	TRANSISTOR DTC144ES				
Q007	8-729-900-89	TRANSISTOR DTC144ES				
		〈 RESISTOR 〉				
R001	1-249-404-00	CARBON	82	5%	1/4W	
R002	1-249-403-11	CARBON	68	5%	1/4W	
R003	1-249-404-00	CARBON	82	5%	1/4W	
R004	1-249-405-11	CARBON	100	5%	1/4W	
R005	1-249-429-11	CARBON	10K	5%	1/4W	
R007	1-249-429-11	CARBON	10K	5%	1/4W	
R008	1-249-429-11	CARBON	10K	5%	1/4W	
R009	1-247-891-00	CARBON	330K	5%	1/4W	
R010	1-249-420-11	CARBON	1.8K	5%	1/4W	
R011	1-247-895-00	CARBON	470K	5%	1/4W	
R012	1-249-433-11	CARBON	22K	5%	1/4W	
R013	1-249-432-11	CARBON	18K	5%	1/4W	
R014	1-249-417-11	CARBON	1K	5%	1/4W	
R016	1-249-417-11	CARBON	1K	5%	1/4W	
R017	1-249-421-11	CARBON	2.2K	5%	1/4W	
R018	1-249-421-11	CARBON	2.2K	5%	1/4W	
R019	1-249-412-11	CARBON	390	5%	1/4W	
R020	1-249-412-11	CARBON	390	5%	1/4W	
R021	1-249-416-11	CARBON	820	5%	1/4W	
R022	1-249-426-11	CARBON	5.6K	5%	1/4W	
R023	1-249-421-11	CARBON	2.2K	5%	1/4W	
R024	1-249-413-11	CARBON	470	5%	1/4W	
R025	1-249-415-11	CARBON	680	5%	1/4W	
R026	1-249-414-11	CARBON	560	5%	1/4W	
R027	1-249-416-11	CARBON	820	5%	1/4W	
R028	1-249-417-11	CARBON	1K	5%	1/4W	
R029	1-249-418-11	CARBON	1.2K	5%	1/4W	
R030	1-249-419-11	CARBON	1.5K	5%	1/4W	
R031	1-249-421-11	CARBON	2.2K	5%	1/4W	
R032	1-249-417-11	CARBON	1K	5%	1/4W	
R033	1-249-429-11	CARBON	10K	5%	1/4W	

****

* A-6726-325-A YP-11 BOARD, COMPLETE

****

(Ref. No 6,000 Series)

〈 CAPACITOR 〉

C701	1-164-092-11	CERAMIC	0.0033uF	10%	25V
C702	1-161-379-00	CERAMIC	0.01uF	20%	25V
C703	1-126-163-11	ELECT	4.7uF	20%	50V
C704	1-124-248-00	ELECT	22uF	20%	35V
C705	1-164-159-11	CERAMIC	0.1uF		50V
C706	1-126-163-11	ELECT	4.7uF	20%	50V
C707	1-126-163-11	ELECT	4.7uF	20%	50V
C708	1-164-046-11	CERAMIC	10PF	0.5PF	50V
C709	1-124-443-00	ELECT	100uF	20%	10V
C710	1-164-098-11	CERAMIC	0.047uF		12V
C711	1-102-820-00	CERAMIC	330PF	5%	50V
C712	1-102-822-00	CERAMIC	390PF	5%	50V
C713	1-162-293-31	CERAMIC	820PF	10%	50V
C714	1-161-379-00	CERAMIC	0.01uF	20%	25V
C715	1-161-379-00	CERAMIC	0.01uF	20%	25V
C718	1-124-927-11	ELECT	4.7uF	20%	100V

Ref. No.	Part No.	Description			Remark
C723	1-161-379-00	CERAMIC	0.01uF	20%	25V
C724	1-161-494-00	CERAMIC	0.022uF		25V
C725	1-161-379-00	CERAMIC	0.01uF	20%	25V
C726	1-161-379-00	CERAMIC	0.01uF	20%	25V
C727	1-161-379-00	CERAMIC	0.01uF	20%	25V
C728	1-164-060-11	CERAMIC	39PF	5%	50V
C730	1-161-379-00	CERAMIC	0.01uF	20%	25V
C731	1-124-443-00	ELECT	100uF	20%	10V
C732	1-164-068-11	CERAMIC	82PF	5%	50V
C733	1-164-058-11	CERAMIC	33PF	5%	50V
C734	1-102-824-00	CERAMIC	470PF	5%	50V
C735	1-164-159-11	CERAMIC	0.1uF		50V
C736	1-164-066-11	CERAMIC	68PF	5%	50V
C737	1-161-379-00	CERAMIC	0.01uF	20%	25V
C738	1-124-925-11	ELECT	2.2uF	20%	100V
C739	1-164-072-11	CERAMIC	120PF	5%	50V
C741	1-124-126-00	ELECT	47uF	20%	10V
C743	1-162-851-11	CERAMIC	0.1uF	10%	16V
C744	1-124-589-11	ELECT	47uF	20%	16V
C746	1-161-379-00	CERAMIC	0.01uF	20%	25V
C747	1-164-159-11	CERAMIC	0.1uF		50V
C749	1-164-159-11	CERAMIC	0.1uF		50V
C750	1-161-379-00	CERAMIC	0.01uF	20%	25V
C751	1-164-096-11	CERAMIC	0.01uF		50V
C753	1-124-589-11	ELECT	47uF	20%	16V
C754	1-164-058-11	CERAMIC	33PF	5%	50V
C755	1-164-072-11	CERAMIC	120PF	5%	50V
C756	1-102-978-00	CERAMIC	220PF	5%	50V
C760	1-164-095-11	CERAMIC	0.01uF	10%	16V
C763	1-124-927-11	ELECT	4.7uF	20%	100V
C768	1-164-159-11	CERAMIC	0.1uF		50V
C770	1-102-978-00	CERAMIC	220PF	5%	50V
C771	1-161-379-00	CERAMIC	0.01uF	20%	25V
C780	1-164-159-11	CERAMIC	0.1uF		50V
C782	1-164-068-11	CERAMIC	82PF	5%	50V
C783	1-102-820-00	CERAMIC	330PF	5%	50V
C785	1-164-095-11	CERAMIC	0.01uF	10%	16V
C790	1-164-159-11	CERAMIC	0.1uF		50V
C834	1-126-162-11	ELECT	3.3uF	20%	50V
C860	1-126-157-11	ELECT	10uF	20%	16V
C867	1-162-286-31	CERAMIC	220PF	10%	50V
C898	1-164-159-11	CERAMIC	0.1uF		50V

Ref. No.	Part No.	Description			Remark
C901	1-161-772-11	CERAMIC	0.1uF	10%	25V
C902	1-162-290-31	CERAMIC	470PF	10%	50V
C903	1-162-839-11	CERAMIC	0.01uF	10%	16V
		⟨ CONNECTOR ⟩			
* CN701	1-565-438-11	SOCKET, CONNECTOR (PCB) 10P			
* CN702	1-565-346-11	SOCKET, CONNECTOR (PC BAORD)7P			
CN703	1-573-124-11	CONNECTOR, BOARD TO BOARD 15P			
CN704	1-506-489-11	CONNECTOR 10P, MALE			
		⟨ DIODE ⟩			
D701	8-719-911-19	DIODE 1SS119			
D705	8-719-911-19	DIODE 1SS119			
		⟨ FILTER ⟩			
FL701	1-236-312-11	FILTER, BAND PASS			
		⟨ IC ⟩			
IC701	8-759-420-07	IC AN3231K			
IC702	8-752-321-89	IC CXL5003P			
IC802	8-759-822-05	IC LA7213			
		⟨ COIL ⟩			
L202	1-408-409-00	INDUCTOR 10uH			
L701	1-408-421-00	INDUCTOR 100uH			
L704	1-408-420-00	INDUCTOR 82uH			
L705	1-408-422-00	INDUCTOR 120uH			
L706	1-410-521-11	INDUCTOR 100uH			
L707	1-408-421-00	INDUCTOR 100uH			
L708	1-408-421-00	INDUCTOR 100uH			
L709	1-408-421-00	INDUCTOR 100uH			
L712	1-408-410-00	INDUCTOR 12uH			
L713	1-408-413-00	INDUCTOR 22uH			
L726	1-408-424-00	INDUCTOR 180uH			
L892	1-408-409-00	INDUCTOR 10uH			
		⟨ TRANSISTOR ⟩			
Q702	8-729-119-76	TRANSISTOR 2SA1175-HFE			
Q704	8-729-900-89	TRANSISTOR DTC144ES			
Q705	8-729-119-78	TRANSISTOR 2SC2785-HFE			
Q706	8-729-119-76	TRANSISTOR 2SA1175-HFE			

YP-11 POWER BLOCK

Ref. No.	Part No.	Description				Remark
Q711	8-729-119-76	TRANSISTOR	2SA1175-HFE			
Q721	8-729-119-78	TRANSISTOR	2SC2785-HFE			
Q722	8-729-900-89	TRANSISTOR	DTC144ES			
Q723	8-729-900-89	TRANSISTOR	DTC144ES			
Q810	8-729-900-65	TRANSISTOR	DTA144ES			
Q883	8-729-119-78	TRANSISTOR	2SC2785-HFE			
		⟨ RESISTOR ⟩				
R701	1-247-891-00	CARBON	330K	5%	1/4W	
R703	1-249-428-11	CARBON	8.2K	5%	1/4W	
R704	1-249-427-11	CARBON	6.8K	5%	1/4W	
R705	1-249-426-11	CARBON	5.6K	5%	1/4W	
R706	1-249-421-11	CARBON	2.2K	5%	1/4W	
R707	1-247-834-11	CARBON	1.3K	5%	1/4W	
R708	1-247-818-11	CARBON	300	5%	1/4W	
R709	1-249-423-11	CARBON	3.3K	5%	1/4W	
R710	1-249-438-11	CARBON	56K	5%	1/4W	
R712	1-249-425-11	CARBON	4.7K	5%	1/4W	
R713	1-249-421-11	CARBON	2.2K	5%	1/4W	
R717	1-249-420-11	CARBON	1.8K	5%	1/4W	
R718	1-249-422-11	CARBON	2.7K	5%	1/4W	
R719	1-249-426-11	CARBON	5.6K	5%	1/4W	
R720	1-249-424-11	CARBON	3.9K	5%	1/4W	
R722	1-249-419-11	CARBON	1.5K	5%	1/4W	
R723	1-249-426-11	CARBON	5.6K	5%	1/4W	
R724	1-249-419-11	CARBON	1.5K	5%	1/4W	
R725	1-249-412-11	CARBON	390	5%	1/4W	
R726	1-249-416-11	CARBON	820	5%	1/4W	
R727	1-249-421-11	CARBON	2.2K	5%	1/4W	
R728	1-247-897-11	CARBON	560K	5%	1/4W	
R731	1-249-413-11	CARBON	470	5%	1/4W	
R734	1-249-434-11	CARBON	27K	5%	1/4W	
R735	1-249-429-11	CARBON	10K	5%	1/4W	
R736	1-249-409-11	CARBON	220	5%	1/4W	
R737	1-249-413-11	CARBON	470	5%	1/4W	
R738	1-249-405-11	CARBON	100	5%	1/4W	
R741	1-249-417-11	CARBON	1K	5%	1/4W	
R742	1-249-417-11	CARBON	1K	5%	1/4W	
R744	1-247-903-00	CARBON	1M	5%	1/4W	
R754	1-249-412-11	CARBON	390	5%	1/4W	
R755	1-259-880-11	CARBON	2.2M	5%	1/4W	
R761	1-249-437-11	CARBON	47K	5%	1/4W	

Ref. No.	Part No.	Description				Remark
R763	1-249-423-11	CARBON	3.3K	5%	1/4W	
R774	1-249-433-11	CARBON	22K	5%	1/4W	
R775	1-249-435-11	CARBON	33K	5%	1/4W	
R776	1-249-410-11	CARBON	270	5%	1/4W	
R777	1-249-417-11	CARBON	1K	5%	1/4W	
R778	1-249-418-11	CARBON	1.2K	5%	1/4W	
R779	1-249-413-11	CARBON	470	5%	1/4W	
R780	1-249-429-11	CARBON	10K	5%	1/4W	
R781	1-249-427-11	CARBON	6.8K	5%	1/4W	
R855	1-249-411-11	CARBON	330	5%	1/4W	
R856	1-247-887-00	CARBON	220K	5%	1/4W	
R857	1-249-417-11	CARBON	1K	5%	1/4W	
R859	1-249-429-11	CARBON	10K	5%	1/4W	
R892	1-249-429-11	CARBON	10K	5%	1/4W	
R893	1-249-417-11	CARBON	1K	5%	1/4W	
		⟨ VARIABLE RESISTOR ⟩				
RV701	1-238-015-11	RES, ADJ, CARBON	4.7K			
RV702	1-238-015-11	RES, ADJ, CARBON	4.7K			
RV703	1-238-016-11	RES, ADJ, CARBON	10K			
RV704	1-238-017-11	RES, ADJ, CARBON	22K			
RV705	1-238-017-11	RES, ADJ, CARBON	22K			
RV707	1-238-012-11	RES, ADJ, CARBON	1K			
RV708	1-238-016-11	RES, ADJ, CARBON	10K			
RV710	1-241-119-11	RES, ADJ, CARBON	1K			

****

⚠ 1-413-635-11 POWER BLOCK (UB MODEL)
****

⚠ 1-413-636-11 POWER BLOCK (EI, VP MODEL)
****

⚠ 1-413-637-11 POWER BLOCK (AEP, CP MODEL)
****

(Ref. No 9,000 Series)

⟨ CAPACITOR ⟩

C115	1-130-495-00	MYLAR	0.1uF	50V
C201	1-124-122-11	ELECT	100uF	50V
C204	1-126-301-11	ELECT	1uF	50V
C206	1-126-101-11	ELECT	100uF	16V
C207	1-126-101-11	ELECT	100uF	16V

The components identified by mark ⚠ or dotted line with mark ⚠ are critical for safety.
Replace only with part number specified.

POWER BLOCK

Ref. No.	Part No.	Description		Remark
C208	1-124-893-11	ELECT	2200uF	10V
C209	1-124-443-00	ELECT	100uF	10V
C211	1-124-443-00	ELECT	100uF	10V
C212	1-124-122-11	ELECT	100uF	50V
C213	1-124-471-00	ELECT	1000uF	6.3V
C218	1-124-443-00	ELECT	100uF	10V
		⟨ CONNECTOR ⟩		
CN711	1-506-473-11	CONNECTOR 8P		
CN712	1-506-474-11	CONNECTOR 9P		
		⟨ DIODE ⟩		
⚠D101	9-900-511-01	DIODE S1WBA60		
D102	8-719-948-45	DIODE ERA22-08		
D103	8-719-948-45	DIODE ERA22-08		
D104	8-719-200-82	DIODE 11ES2		
D105	8-719-109-63	DIODE RD3.0EB2		
D106	8-719-911-19	DIODE 1SS119		
D201	9-900-534-01	DIODE ERA18-02		
D202	8-719-114-55	DIODE RD9.1JSB		
D203	8-719-311-30	DIODE RL4Z		
D204	9-998-861-01	DIODE ERA83-004		
D205	8-719-981-00	DIODE ERC81-004		
D207	9-900-534-01	DIODE ERA18-02		
D208	9-998-861-01	DIODE ERA83-004		
		⟨ FUSE ⟩		
⚠F101	1-532-203-00	FUSE 250V 2A		
		⟨ IC ⟩		
⚠IC201	9-900-530-01	IC AN7809F		
⚠IC202	8-759-420-19	IC AN1431T		
⚠IC203	8-759-420-19	IC AN1431T		
⚠IC204	8-759-420-19	IC AN1431T		
		⟨ COIL ⟩		
L201	9-901-974-01	CHOCK COIL 10uH		
		⟨ COUPLER ⟩		
⚠PC101	8-719-939-00	COUPLER, PHOTO PC111S		

Ref. No.	Part No.	Description				Remark
		⟨ TRANSISTOR ⟩				
⚠Q101	8-729-204-94	TRANSISTOR 2SC3559				
⚠Q102	8-729-142-46	TRANSISTOR 2SC2001-L				
⚠Q201	9-901-973-01	TRANSISTOR 2SC4545				
⚠Q202	9-901-973-01	TRANSISTOR 2SC4545				
⚠Q203	8-729-993-42	TRANSISTOR 2SA934-Q				
⚠Q204	8-729-201-53	TRANSISTOR 2SA1015-GR				
Q205	8-729-900-80	TRANSISTOR DTC114ES				
		⟨ RESISTOR ⟩				
⚠R101	1-202-719-00	SOLID	1M	5%	1/2W	
R103	1-247-883-00	CARBON	150K	5%	1/4W	
R104	1-247-883-00	CARBON	150K	5%	1/4W	
R105	1-247-883-00	CARBON	150K	5%	1/4W	
R106	1-249-441-11	CARBON	100K	5%	1/4W	
R107	1-249-441-11	CARBON	100K	5%	1/4W	
⚠R109	1-215-928-11	METAL	68K	5%	3W	
R111	1-247-828-11	CARBON	750	5%	1/4W	
R112	1-249-397-11	CARBON	22	5%	1/4W	
R201	1-249-421-11	CARBON	2.2K	5%	1/4W	
R202	1-249-414-11	CARBON	560	5%	1/4W	
R203	1-249-405-11	CARBON	100	5%	1/4W	
R204	1-249-405-11	CARBON	100	5%	1/4W	
R206	1-249-425-11	CARBON	4.7K	5%	1/4W	
R207	1-247-834-11	CARBON	1.3K	5%	1/4W	
R210	1-215-425-00	METAL	1.5K	5%	1/4W	
R211	1-249-414-11	CARBON	560	5%	1/4W	
R212	1-215-425-00	METAL	1.5K	5%	1/4W	
R213	1-249-405-11	CARBON	100	5%	1/4W	
R214	1-249-405-11	CARBON	100	5%	1/4W	
R215	1-215-425-00	METAL	1.5K	5%	1/4W	
R216	1-249-409-11	CARBON	220	5%	1/4W	
R217	1-215-425-00	METAL	1.5K	5%	1/4W	
⚠R218	1-212-934-00	FUSE	1	5%	1/2W	
R219	1-249-429-11	CARBON	10K	5%	1/4W	
R220	1-249-413-11	CARBON	470	5%	1/4W	
R221	1-249-413-11	CARBON	470	5%	1/4W	
R222	1-249-417-11	CARBON	1K	5%	1/4W	
R223	1-249-417-11	CARBON	1K	5%	1/4W	

The components identified by mark ⚠ or dotted line with mark ⚠ are critical for safety.
Replace only with part number specified.

POWER BLOCK

Ref. No.	Part No.	Description	Remark
		⟨ VARIABLE RESISTOR ⟩	
RV201	9-901-975-01	RES, ADJ, CARBON 1KΩ	
		⟨ THYRISTOR ⟩	
⚠SCR201	9-901-972-01	THYRISTOR 2P4M	
		⟨ TRANCE ⟩	
⚠T101	9-901-971-01	TRANCE, CONVERTOR	
**********			
		MISCELLANEOUS	
		**********	
11	1-466-497-71	SWITCH BLOCK, CONTROL (AEP/UB/EI MODEL)	
11	1-466-497-81	SWITCH BLOCK, CONTROL (VP MODEL)	
11	1-466-497-91	SWITCH BLOCK, CONTROL (CP MODEL)	
16	1-572-662-11	SWITCH, ROTARY	
24	1-465-724-41	REMOTE COMMANDER (RMT-V118A) (CP MODEL)	
32	1-465-739-21	REMOTE COMMANDER (RMT-V117) (EXCEPT CP MODEL)	
⚠54	1-413-635-11	POWER BLOCK (UB MODEL)	
⚠54	1-413-636-11	POWER BLOCK (VP/EI MODEL)	
⚠54	1-413-637-11	POWER BLOCK (AEP/CP MODEL)	
260	1-543-647-11	HEAD, FE	
264	1-550-655-11	UPPER DRUM ASSY (DZR-32-R)	
* 328	1-633-460-11	PC BOAD, CA-41	
D001	8-719-985-00	DIODE GL451VS1 (LED)	
M901	1-550-656-11	LOWER DRUM ASSY (DZL-32A-R)	
M902	8-835-394-11	MOTOR, DC U-26F	
PC001	1-558-924-21	CABLE, PIN	
Q001	8-729-926-31	PHOTO TRANSISTOR PT483F1S	
⚠RF201	1-466-328-11	MODULATOR, RF (RFU-2017)	
⚠RF201	1-466-347-11	MODULATOR, RF (RFU-2017) (UB/EI MODEL)	
⚠TI701	1-465-744-11	TUNER, VIF (BTF-2U601) (UB MODEL)	
⚠TI701	1-465-745-11	TUNER, VIF (BTF-2U401) (VP MODEL)	
⚠TI701	1-465-746-11	TUNER, VIF (BTF-2U402) (AEP/CP MODEL)	
⚠TI701	1-465-747-11	TUNER, VIF (BTF-2U403) (EI MODEL)	
S001	1-692-062-21	SWITCH, ROTARY	
**********			

Ref. No.	Part No.	Description	Remark
		ACCESSORIES & PACKING MATERIALS	
		**********	
	1-551-513-00	CABLE, COAXIAL ASS'Y	
	⚠1-575-131-11	CORD, POWER (AEP/CP/EI MODEL)	
	⚠1-575-132-11	CORD, POWER (VP MODEL)	
	⚠1-590-865-11	CORD, POWER (UB MODEL)	
	3-754-065-11	MANUAL, INSTRUCTION (UB/EI MODEL) (ENGLISH)	
	3-754-065-41	MANUAL, INSTRUCTION (AEP MODEL) (SWEDISH/DUTCH/FRENCH)	
	3-754-065-51	MANUAL, INSTRUCTION (VP MODEL) (GERMAN/FRENCH/ITALIAN)	
	3-754-065-61	MANUAL, INSTRUCTION (CP MODEL) (SPANISH/PORTUGUESE)	
	3-754-065-71	MANUAL, INSTRUCTION (AEP MODEL) (ITALIAN)	
	3-942-852-01	CUSHION (UPPER)	
	3-942-853-01	CUSHION (LOWER)	
*	3-945-163-01	INDIVIDUAL CARTON	
**********			
		HARDWARE LIST	
		**********	
#1	7-685-647-79	SCREW +BVTP 3X10 TYPE2 IT-3	
#2	7-685-648-79	SCREW +BVTP 3X12 TYPE2 IT-3	
#3	7-685-646-79	SCREW +BVTP 3X8 TYPE2 IT-3	
#4	7-627-552-08	SCREW, PRECISION +P 1.7X2.5	
#5	7-682-645-01	SCREW +PS 3X4	
#6	7-621-732-08	SET-SCT, HEX. 2X3 FLAT POINT	
#7	7-682-547-04	SCREW +P 3X6	
#8	7-682-548-04	SCREW +P 3X8	
#9	7-628-254-00	SCREW +PS 2.6X5	
#10	7-624-102-04	STOP RING 1.5, TYPE-E	

The components identified by mark ⚠ or dotted line with mark ⚠ are critical for safety.
Replace only with part number specified.

SECTION 7
ELECTRICAL ADJUSTMENTS

During the adjustment, see the Parts Arrangement Diagram relevant to the adjustment on page 146.

7-1. PRE-ADJUSTMENT PREPARATIONS

Necessary items and indications for total adjustment of electric circuit of this machine will be described in this chapter.

7-1-1. Instruments to be Used

1) Color TV
2) Oscilloscope 1 or 2 phenomena, band more than 30 MHz, delay mode, as provided.
3) Frequency counter (min, 8 digits)
4) PAL pattern generator
5) Digital voltmeter
6) Audio level meter
7) Audio generator
8) Attenuator
9) Distortion factor meter
10) Alignment tape
    Part code: H7099052H (MH-2)
11) Extention cable for YP-11 board.
    10P 2 mm pitch Part code:
    7P 2 mm pitch Part code:

7-1-2. Connection

Unless otherwise specified, connect and adjust the measuring instruments as shown in the following diagram.

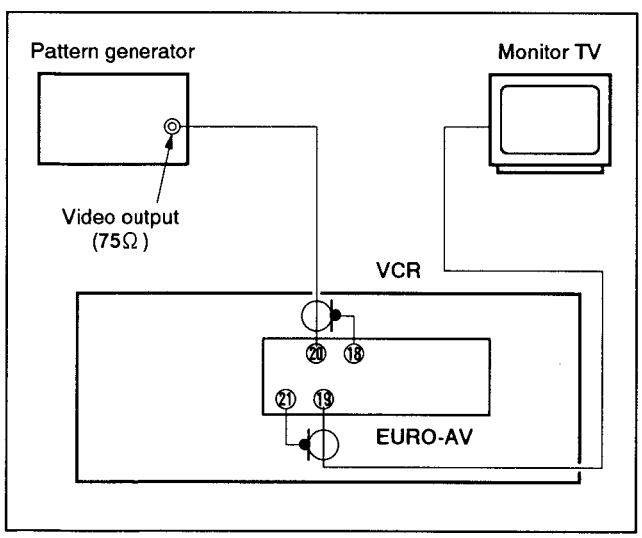

Fig. 7-1.

7-1-3. Setup for Adjustment

In this adjustment, PAL pattern generator is connected with Pin ⑳ of EURO-AV connector. When check to tuner, connected AERIAL terminal. Check that the amplitudes of video signal SYNC signal, of picture portions, and of burst signals are flat at approximately 0.3, 0.7 and 0.3V, respectively, and that the level ratio of the burst signal and "red" signal are 0.30:0.66. Fig. 7-2. shows video signals (color bars) used in adjusting the video section.

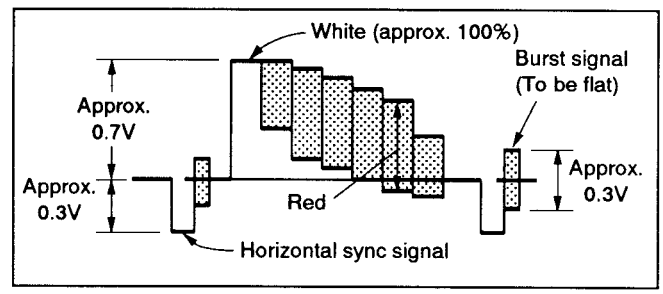

Fig. 7-2.

7-1-4. Alignment Tape (MH-2)

	Time	Video signal	Audio signal
1	10 min	Stair-step	6 kHz
2	5 min	———	3 kHz
3	10 min	Color bar	1 kHz
4	3 min	RF sweep	———

Table 7-1.

7-1-5. Specified I/O Level and Impedance

Input/output terminal

Video inputs	EURO-AV: 21-pin (Pin ⑳) 1 Vp-p, 75Ω , unbalanced, sync negative
Audio inputs	EURO-AV: 21-pin (Pin ② and ⑥) More than 10 kΩ , –7.5 dBs
Video outputs	EURO-AV: 21-pin (Pin ⑲) 1 Vp-p, 75Ω , unbalanced sync negative
Audio outputs	EURO-AV: 21-pin (Pins ① and ③) Output impedance: less than 1 kΩ –7.5 dBs with 10 kΩ load

7-1-6. Adjusting Sequence

Make the electrical adjustment in the following sequence.

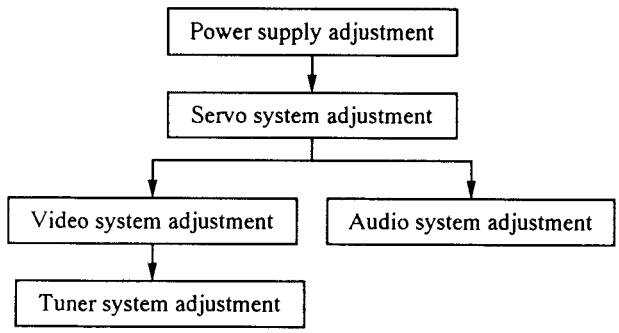

7-2. POWER SUPPLY ADJUSTMENT

7-2-1. UNSW 12V Adjustment (Power Block)

Mode	E-E
Measurement Point	Pin ⑥ of CN712
Measuring Instrument	Digital voltmeter
Adjusting Element	RV201
Specified Value	12.0 ± 0.1 Vdc

Adjusting method:

1) With RV201, adjust the voltage to 12.0 ± 0.1 Vdc.

7-2-2. Power Supply Check (Power Block)

Mode	E-E
Measuring instrument	Digital voltmeter
UNSW 5.8V check	
Measurement point	Pin ④ of CN711
Specified value	5.8 ± 0.25 Vdc
DC –30V check	
Measurement point	Pin ⑦ of CN712
Specified value	–27.0 ± 2.5 Vdc
DC +35V check	
Measurement point	Pin ③ of CN711
Specified value	37.0 ± 3.0 Vdc
SW 5V check	
Measurement point	Pin ⑥ of CN711
Specified value	5.0 ± 0.2 Vdc
SW 9V check	
Measurement point	Pin ⑦ of CN711
Specified value	9.0 ± 0.3 Vdc
MTR 12V check	
Measurement point	Pin ③ of CN712
Specified value	12.3 ± 0.3 Vdc
DC 2.5V check	
Measurement point	+ : Pin ⑧ of CN712 – : Pin ⑨ of CN712
Specified value	2.4 ± 0.2V

Checking method:

1) Confirm that each voltage meets its specified value.

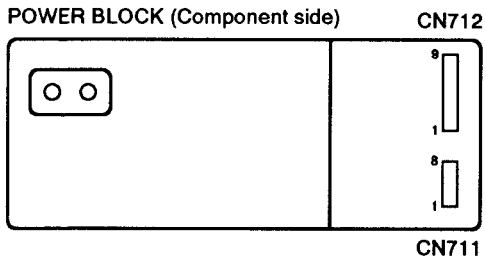

Fig. 7-3.

7-3. SERVO SYSTEM ADJUSTMENT

7-3-1. Switching Position Adjustment (MA-125 Board)

Mode	PB
Signal	Alignment tape: SP stair-step section
Measurement Point	CH1: Pin ⑲ of CN201 (EURO-AV) CH2: Pin ⑦ of CN903 (RF SWP)
Measuring Instrument	Oscilloscope
Adjusting Element	RV501
Specified Value	6.5 ± 0.5H (410 ± 30 μsec)

Adjusting method:

1) Set to PB mode and press both buttons of tracking control to set it to the center.
2) With RV501, adjust the switching position to 6.5 ± 0.5H (410 ± 30 μsec).

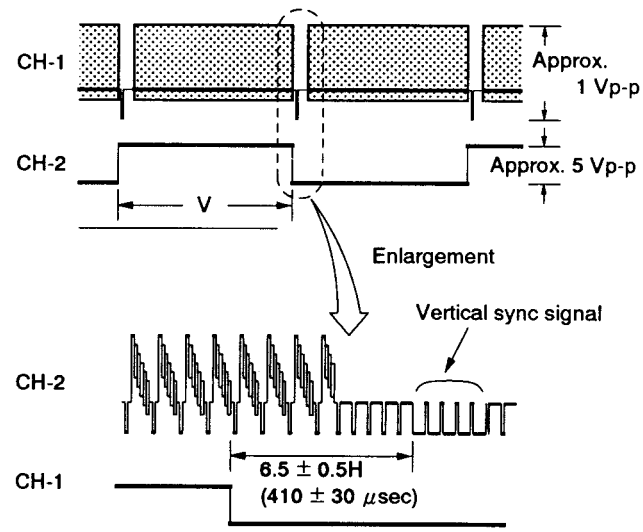

Fig. 7-4.

7-4. VIDEO SYSTEM ADJUSTMENTS

When adjusting YP-11 and PC-54 boards, use the extention cable.

Adjust the video system in the following sequence as a rule. The color video signal supplied from the pattern generator is used as a video input signal for video system adjustment in the recording mode.
Make sure that sync and color burst signals meet requirements specified at setup of adjustment shown in Fig. 7-2.

[Adjusting sequence]

7-4-1. Playback Y Signal Level Adjustment
7-4-2. Y Signal NR Level Adjustment
7-4-3. Sync AGC Adjustment
7-4-4. Sync Tip Carrier Set and Deviation Adjustment
7-4-5. White Clip, Dark Clip Adjustment
7-4-6. Recording Y Signal Level Adjustment
7-4-7. Recording Chroma Level Adjustment
7-4-8. Character generator AFC adjustment

7-4-1. Playback Y Signal Level Adjustment (YP-11 Board)

Mode	PB
Signal	Alignment tape: SP color bar section
Measurement Point	EURO-AV connector (Pin ⑲ of CN201)
Measuring Instrument	Oscilloscope
Adjusting Element	RV708
Specified Value	1.00 ± 0.05 Vp-p

Note: 1) Make this adjustment with the EDIT ON/OFF button set to off.
2) Pin ⑲ of CN201 must be terminated at 75Ω ± 1%.

Adjusting method:
1) With RV708, adjust the VIDEO signal level to 1.00 ± 0.05 Vp-p.

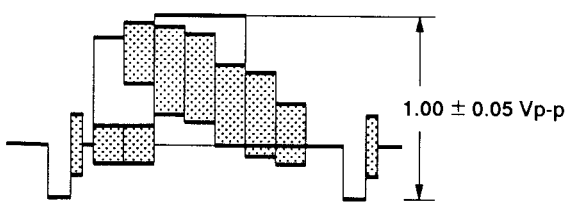

Fig. 7-5.

7-4-2. Y Signal NR Level Adjustment (YP-11 Board)

Mode	PB
Signal	Alignment tape: SP color bar section
Measurement Point	Pin ⑩ of IC701
Measuring Instrument	Oscilloscope
Adjusting Element	RV707
Specified Value	Less than 150 mVp-p

Adjusting method:
1) Adjust to eliminate level differences for each H step with RV707.

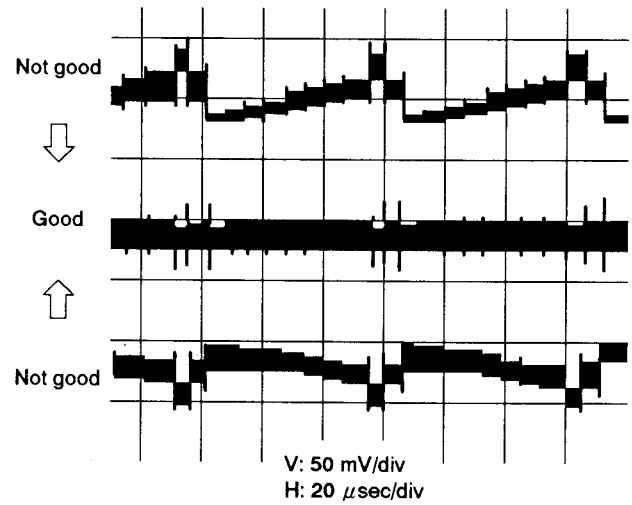

Fig. 7-6.

7-4-3. Sync AGC Adjustment (YP-11 Board)

Mode	E-E
Signal	Color bar
Measurement Point	EURO-AV connector (Pin ⑲ of CN201)
Measuring Instrument	Oscilloscope
Adjusting Element	RV701
Specified Value	1.00 ± 0.05 Vp-p

Note: Pin ⑲ of CN201 must be terminates at 75Ω .

Adjusting method:
1) With RV701, adjust the VIDEO signal level to 1.00 ± 0.05 Vp-p.

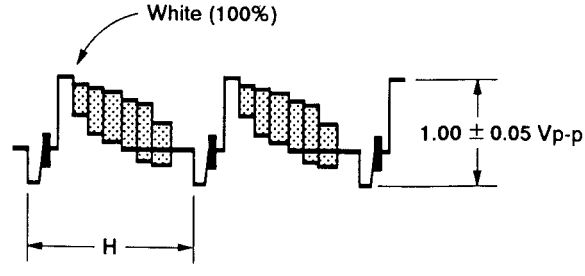

Fig. 7-7. SYNC AGC adjustment

7-4-4. Sync Tip Carrier Set and Deviation Adjustment (YP-11 Board)

Before starting the adjustment, be sure to check that recording Y signal level adjustment has been completed.

Sync tip carrier set	
Mode	E-E
Signal	No signal (Note 2)
Measurement Point	Pin ㉔ of IC701
Measuring Instrument	Frequency counter
Adjusting Element	RV703
Specified Value	3.80 ± 0.05 MHz
Deviation adjustment	
Mode	REC and PB
Signal	Color bar
Measurement Point	EURO-AV connector (Pin ⑲ of CN201)
Measuring Instrument	Oscilloscope
Adjusting Element	RV702
Specified Value	1.00 ± 0.05 Vp-p

Note: Pin ⑲ of CN201 must be terminated at 75Ω .

Adjusting method:

1) Make a no signal state and select the E-E made.
2) Connect the frequency counter to the Pin ㉔ of IC701 and adjust to 3.80 ± 0.05 MHz with RV703.
3) Input the color bar signal to make recording.
4) Playback the recorded tape portion and check that the playback Y signal level is 1.00 ± 0.05 Vp-p.

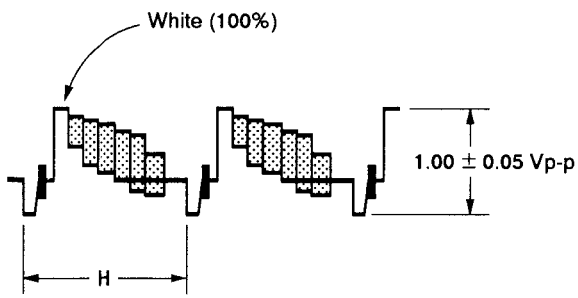

Fig. 7-8. Deviation adjustment

5) When the specified value is not met, input the color bar signal to select the E-E mode. Adjust RV702 to correct a playback Y signal level error, and then, repeat the steps 1) through 4) above.

7-4-5. White Clip and Dark Clip Adjustments (YP-11 Board)

Mode	E-E
Signal	Color bar
Measurement Point	Pin ⑳ of IC701
Measuring Instrument	Oscilloscope
Adjusting Element	White clip: RV705 Dark clip: RV704
Specified Value	White clip: 185^{+5}_{-10} % Dark clip: 45^{+5}_{-10} %

Adjusting method:

1) With RV705, adjust the white clip level to 185^{+5}_{-10}% of the white level (100%).
2) With RV704, adjust the dark clip level to 45^{+5}_{-10}% of the white level (100%).

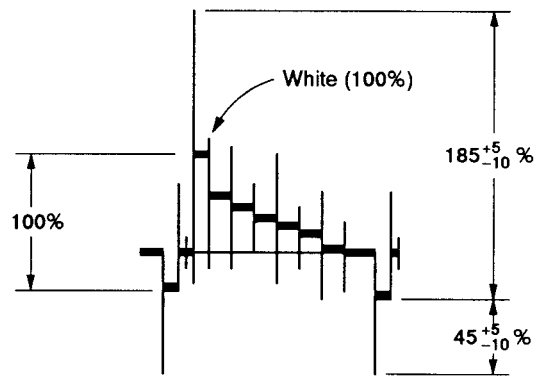

Fig. 7-9.

7-4-6. Recording Y Signal Level Adjustment (YP-11 Board/RP-100 Board)

Mode	REC
Signal	No signal
Measurement Point	Pin ② of CN002 (RP-100 board)
Measuring Instrument	Oscilloscope
Adjusting Element	RV710 (YP-11 board)
Specified Value	2.2 ± 0.1 Vp-p

Adjusting method:

1) With RV710, adjust the Y REC RF signal level to 2.2 ± 0.1 Vp-p.

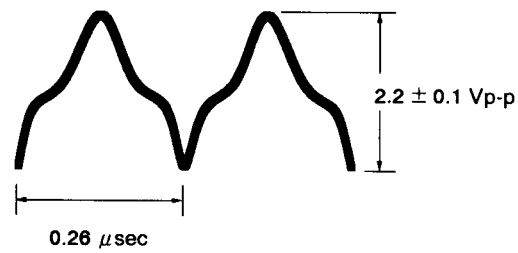

Fig. 7-10.

7-4-7. Recording Chroma Level Adjustment (PC-54 Board)

Mode	E-E
Signal	Color bar
Measurement Point	Pin ① of CN801
Measuring Instrument	Oscilloscope
Adjusting Element	RV801
Specified Value	165 ± 10 mVp-p

Adjusting method:

1) Adjust RV801 so that the red chroma signal level became 165 ± 10 mVp-p.

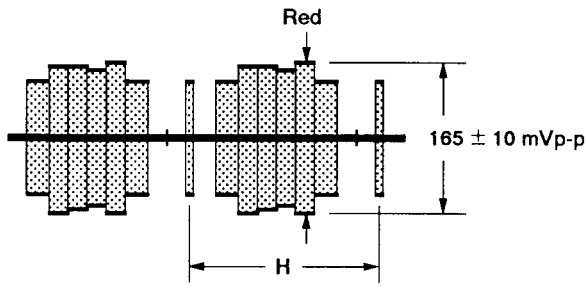

Fig. 7-11.

7-4-8. Character Generator AFC Adjustment (CV-26 Board)

Mode	E-E
Signal	No signal
Measurement Point	Pin ⑧ of IC490
Measuring Instrument	Oscilloscope
Adjusting Element	RV491
Specified Value	15625 ± 50 Hz

Connection:

1) Short-circuit C492 with a jumper wire.

Adjusting method:

1) Adjust RV491 so that the oscillation frequency is 15625 ± 50 Hz.

7-4-9. Character Position Adjustment (CV-26 Board)

Mode	PB
Signal	Alignment tape: color bar section
Measurement Point	Confirmed on monitor TV
Measuring Instrument	
Adjusting Element	CV401
Specified Value	A=B

Adjusting method:

1) Press the TRACKING AUTO/MANUAL button so that the tracking meter appears on the monitor TV screen.
2) Adjust CV401 so that the tracking meter is the center of the screen.

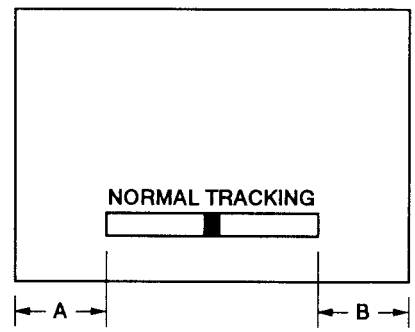

Fig. 7-12.

7-5. AUDIO SYSTEM ADJUSTMENT

- Use a normal VHS cassette for an adjustment tape.
- Make adjustment with the switches set to the following positions.
  INPUT SELECT.....LINE

[Connection]

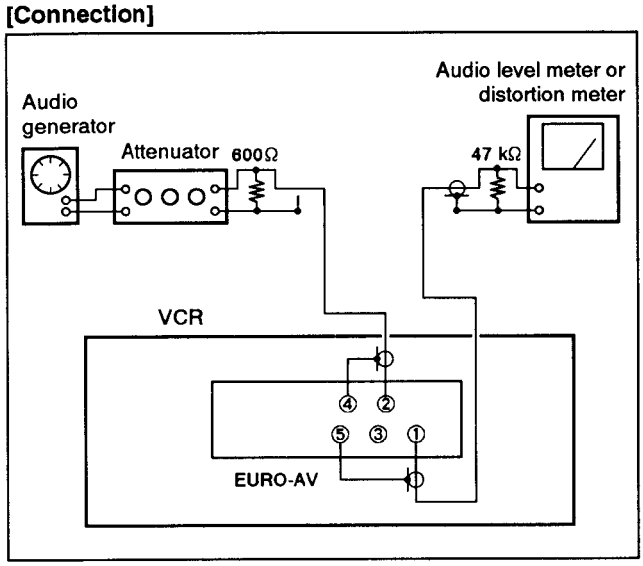

Fig. 7-13.

[Adjusting sequence]

1. ACE head adjustment.....See Mechanism Block Adjustment
2. E-E output level check
3. Recording bias adjustment
4. Overall level characteristic and distortion factor check
5. Overall S/N check

1. ACE head adjustment

See "Mechanism Block Adjustment".

2. E-E output level check

Mode	E-E
Signal	400 Hz, –7.5 dBs
Measurement Point	EURO-AV connector (Pin ① of CN201)
Adjusting Element	Audio level meter
Specified Value	–7.5 ± 2 dBs

Confirming method:

1) Input a signal of 400 Hz, –7.5 dBs to the audio input terminal of EURO-AV connector (Pin ② of CN201).
2) Confirm that the audio output level is –7.5 ± 2 dBs.

3. Recording bias adjustment (MA-125 board)

Mode	REC and PB
Signal	400 Hz, –27.5 dBs 7 kHz, –27.5 dBs
Measurement Point	EURO-AV connector (Pin ① of CN201)
Measuring Instrument	Audio level meter
Adjusting Element	RV301
Specified Value	0 ± 1 dB

Adjusting method:

1) Supply a signal of 400 Hz, –27.5 dBs to the audio input terminal of EURO-AV connector (Pin ② of CN201).
2) Connect the audio level meter to the audio output terminal of EURO-AV connector (Pin ① of CN201).
3) Adjust the attenuator so that the audio level meter will indicate –27.5 dBs.
4) Make recording.
5) Set an audio line input signal to 7 kHz and make recording.
6) Playback a recorded portion, and measure output levels at 400 Hz and 7 kHz.
7) Confirm that the 7 kHz playback output levels within a range of the 400 Hz playback output level 0 ± 1 dB. When beyond this range, adjust RV301 and repeat the steps 1) through 7) above.

4. Overall level characteristic and distortion factor check

Mode	REC and PB
Signal	400 Hz, –7.5 dBs
Measurement Point	EURO-AV connector (Pin ① of CN201)
Measuring Instrument	Audio level meter and distortion factor gauge
Specified Value	Playback level: –7.5 ± 2 dBs Distortion factor: 4% or less

Confirming method:

1) Supply an audio signal of 400 Hz, –7.5 dBs to the audio input terminal of EURO-AV connector (Pin ② of CN201).
2) Make recording.
3) Playback a recorded portion.
4) Confirm that a playback level is –7.5 ± 2 dBs.
5) Confirm that a distortion factor is within 4%.

5. Overall S/N check

Mode	REC and PB
Signal	400 Hz, –7.5 dBs, and no signal
Measurement Point	EURO-AV connector (Pin ① of CN201)
Measuring Instrument	Audio level meter
Specified Value	38 dB or more

Confirming method:

1) Supply a signal of 400 Hz, –7.5 dBs to the audio input terminal of EURO-AV connector (Pin ② of CN201).
2) Make recording.
3) With the REC mode held, make the no signal state. (Connect Pin ② of CN201 and GND with a jumper wire.)
4) Playback a recorded portion, and confirm that there is a level difference of 38 dB or more between 400 Hz portion and no signal portion (immediately after a 400 Hz signal).

7-6. TUNER SYSTEM ADJUSTMENTS

7-6-1. RF AGC Adjustment (IF701 Unit/MA-125 Board)

Signal	Broadcast TV signal
Adjusting Element	VR of IF701 unit (Fig. 7-14.)

Connection:

1) Remove the CV-26 board.
2) Connect Pins ② and ④ of CN401 on the MA-125 board with jumper wire.

Adjusting method:

1) Adjust the monitor TV to a maximum contrast.
2) Turn the VR to make snow noise visible.
3) Turn the VR in an opposite direction and set it to the point where the snow noise disappears.
4) Receive each channel and confirm that there are no beat picture corruption snow noise due to cross modulation.

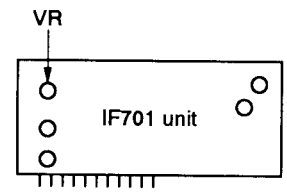

Fig. 7-14.

7-7. ARRANGEMENT DIAGRAMS FOR ADJUSTMENT PARTS

POWER SUPPLY BOARD (SWITCHING BLOCK) (COMPONENT SIDE)

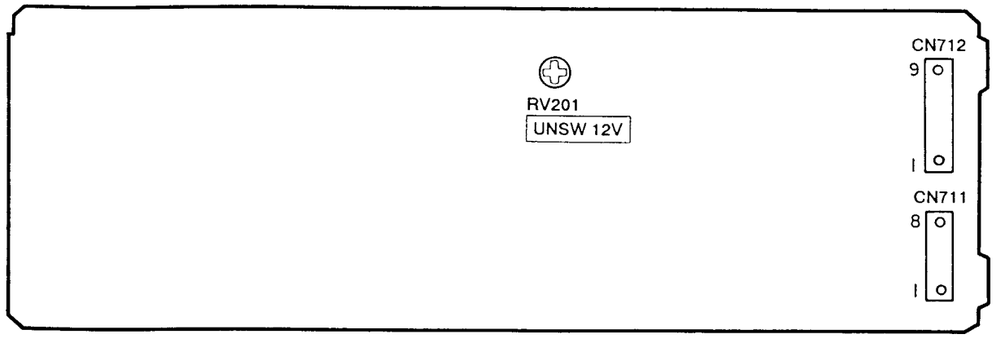

YP-11 BOARD (COMPONENT SIDE)

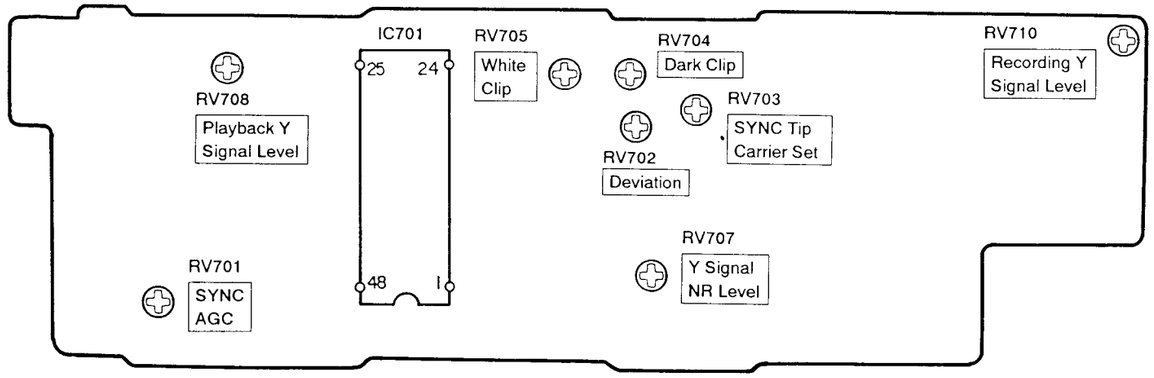

MA-125 BOARD (COMPONENT SIDE)

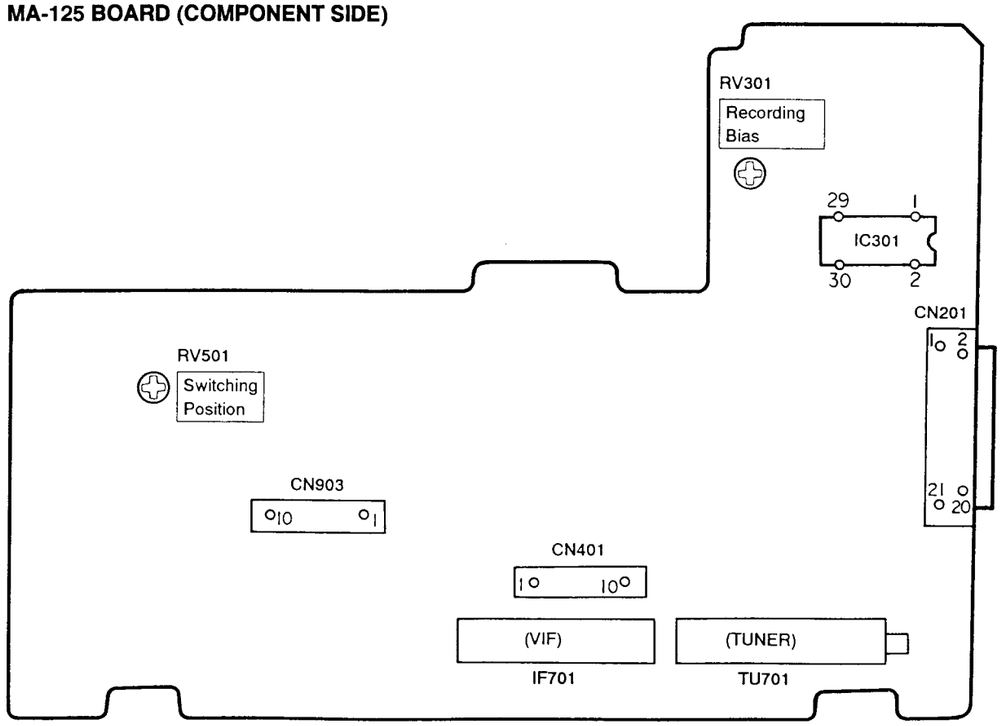

PC-54 BOARD (COMPONENT SIDE)

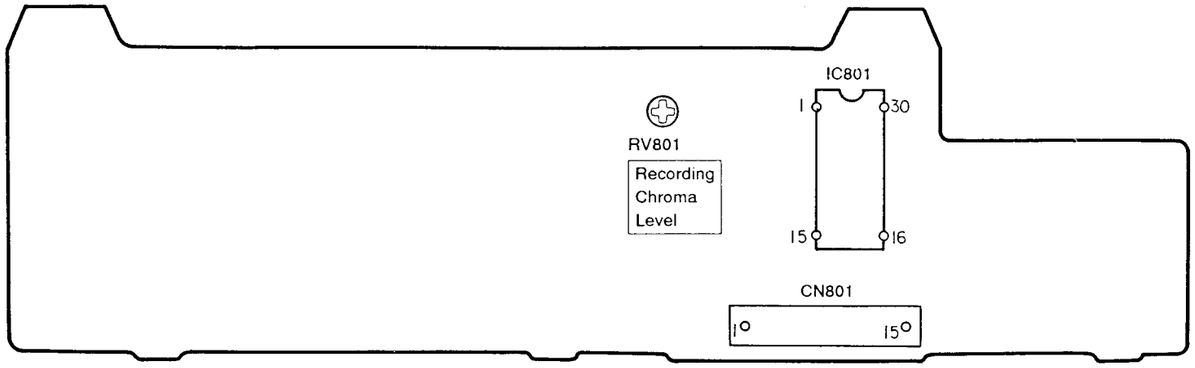
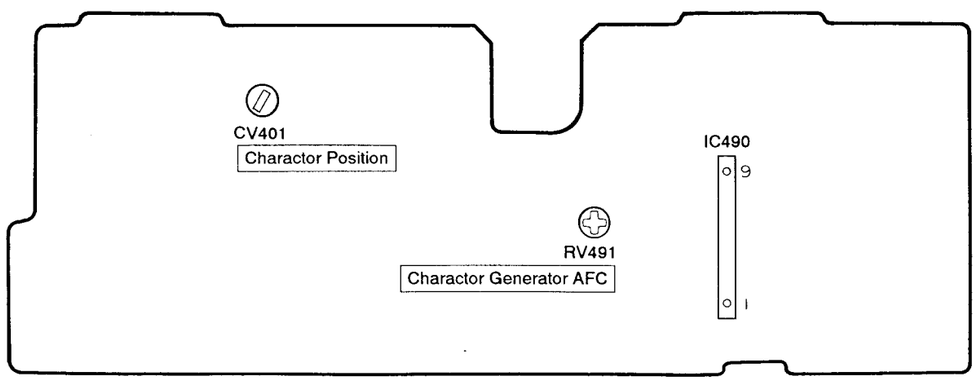
CV-26 BOARD (COMPONENT SIDE)